SUNGROW
Clean power for all

User Manual

PV Grid-Connected Inverter

SG285HX / SG320HX / SG333HX / SG350HX



All Rights Reserved

All Rights Reserved

No part of this document can be reproduced in any form or by any means without the prior written permission of Sungrow Power Supply Co., Ltd (hereinafter "SUNGROW").

Trademarks

SUNGROW and other SUNGROW trademarks used in this manual are owned by SUNGROW.

All other trademarks or registered trademarks mentioned in this manual are owned by their respective owners.

Software Licenses

- It is prohibited to use data contained in firmware or software developed by SUNGROW, in part or in full, for commercial purposes by any means.
- It is prohibited to perform reverse engineering, cracking, or any other operations that compromise the original program design of the software developed by SUNGROW.

About This Manual

The manual mainly contains the product information, as well as guidelines for installation, operation, and maintenance. The manual does not include complete information about the photovoltaic (PV) system. Readers can get additional information at **www.sungrowpower.com** or on the webpage of the respective component manufacturer.

Validity

This manual is valid for the following model of low-power grid-connected PV string inverters:

- SG285HX
- SG320HX
- SG333HX
- SG350HX

It will be referred to as "inverter" hereinafter unless otherwise specified.

Target Group

This manual is intended for professional technicians who are responsible for installation, operation, and maintenance of inverters, and users who need to check inverter parameters.

The inverter must only be installed by professional technicians. The professional technician is required to meet the following requirements:

- Know electronic, electrical wiring and mechanical expertise, and be familiar with electrical and mechanical schematics.
- Have received professional training related to the installation and commissioning of electrical equipment.
- Be able to quickly respond to hazards or emergencies that occur during installation and commissioning.
- Be familiar with local standards and relevant safety regulations of electrical systems.
- Read this manual thoroughly and understand the safety instructions related to operations.

How to Use This Manual

Please read this manual carefully before using the product and keep it properly at a place for easy access.

All contents, pictures, marks, and symbols in this manual are owned by SUNGROW. No part of this document may be reprinted by the non-internal staff of SUNGROW without written authorization.

Contents of this manual may be periodically updated or revised, and the actual product purchased shall prevail. Users can obtain the latest manual from **support.sungrowpower.com** or sales channels.

Security Declaration

For details on the product's network security vulnerability response process and vulnerability disclosure, please visit the following website: https://en.sungrowpower.com/security-vulnerability-management.

For more information on network security, please refer to the user manual of the communication module or the Data Logger that comes with the product.

Symbols

This manual contains important safety instructions, which are highlighted with the following symbols, to ensure personal and property safety during usage, or to help optimize the product performance in an efficient way.

Please carefully understand the meaning of these warning symbols to better use the manual.

⚠ DANGER

Indicates high-risk potential hazards that, if not avoided, may lead to death or serious injury.

⚠ WARNING

Indicates moderate-risk potential hazards that, if not avoided, may lead to death or serious injury.

⚠ CAUTION

Indicates low-risk potential hazards that, if not avoided, may lead to minor or moderate injury.

NOTICE

Indicates potential risks that, if not avoided, may lead to device malfunctions or financial losses.

"NOTE" indicates additional information, emphasized contents or tips that may be helpful, e.g., to help you solve problems or save time.

Contents

All Rights Reserved.....I
About This Manual.....II
1 Safety Instructions.....1
1.1 Unpacking and Inspection.....2
1.2 Installation Safety.....3
1.3 Electrical Connection Safety.....3
1.4 Operation Safety.....5
1.5 Maintenance Safety.....6
1.6 Disposal Safety.....7
2 Product Description.....8
2.1 System Introduction.....8
2.2 Product del producto.....9
2.3 Symbols on Product.....11
2.4 LED Indicator.....11
2.5 DC Switch.....12
2.6 Circuit Diagram.....13
2.7 Function Description.....14
3 Unpacking and Storage.....17
3.1 Unpacking and Inspection.....17
3.2 Unpacking Steps.....17
3.3 Inverter Storage.....19
4 Mechanical Mounting.....20
4.1 Safety During Mounting.....20
4.2 Location Requirements.....20
4.2.1 Installation Environment Requirements.....21
4.2.2 Carrier Requirements.....23
4.2.3 Angle Requirements.....24
4.2.4 Installation space required for the inverter with air outlets on the side (standard configuration).....25
4.3 Installation Tools.....29
4.4 Moving Inverter.....30
4.4.1 Manual Transport.....31
4.4.2 Hoisting Transport.....31
4.5 Installing Mounting-bracket.....33

4.5.1 Bracket-Mounted Installation....34
4.5.2 Pole-Mounting....36
4.6 Installing the Inverter....39
5 Electrical Connection....40
5.1 Safety Instructions....40
5.2 Terminal Description....41
5.3 Electrical Connection Overview....43
5.4 Crimp OT/DT terminal....46
5.5 External Protective Grounding Connection....47
5.5.1 External Protective Grounding Requirements....48
5.5.2 Connection Procedure....48
5.6 AC Cable Connection....49
5.6.1 AC Side Requirements....49
5.6.2 Requirements for OT/DT Terminal....52
5.6.3 One-wire-per-phase Wiring (with Multi-core Cable)....53
5.6.4 Two-wires-per-phase Wiring, Duplex Junction Box (with Multi-core Cable)....61
5.7 DC Cable Connection....68
5.7.1 PV Input Configuration....70
5.7.2 Assembling PV Connectors....71
5.7.3 Installing PV Connector....73
5.8 Wiring of Tracking System Power Cable....74
5.9 RS485 Connection(COM1)....76
5.9.1 Interface Description....76
5.9.2 RS485 Communication System....77
5.9.3 Connection Procedure....78
5.10 PLC Communication Connection....81
5.10.1 Application Scenarios....82
5.10.2 PLC Wiring Rules....84
5.10.3 PLC Wiring....87
5.11 Dry Contact Connection(COM2)....89
5.11.1 Interface Description....89
5.11.2 Dry Contact Function....89
5.11.3 Connection Procedure....91
6 iSolarCloud App....95
6.1 Brief Introduction....95
6.2 Installing App....95
6.3 Network Security Mode Overview....96
6.4 Network Security Mode Switch....98
6.5 Inverter Commissioning (via iSolarCloud App)....99

6.6 Firmware Update..... 100
7 Commissioning..... 101
7.1 Inspection Before Commissioning..... 101
7.2 Commissioning Procedure..... 101
8 Troubleshooting and Maintenance..... 103
8.1 Troubleshooting..... 103
8.2 Maintenance..... 112
8.2.1 Maintenance Notices..... 112
8.2.2 Disconnecting the Inverter..... 113
8.2.3 Routine Maintenance..... 113
8.2.4 Cleaning Air Inlet and Outlet..... 114
8.2.5 Fan Maintenance..... 114
8.3 Inverter Disposal..... 116
8.3.1 Dismantling the Inverter..... 117
8.3.2 Disposal of Inverter..... 117
9 Appendix..... 119
9.1 Technical Data..... 119
9.2 Wring Distance of DI Dry Contact..... 124
9.3 Quality Assurance..... 125
9.4 Contact Information..... 126

1 Safety Instructions

When installing, commissioning, operating, and maintaining the product, strictly observe the labels on the product and the safety requirements in the manual. Incorrect operation or work may cause:

- Injury or death to the operator or a third party.
- Damage to the product and other properties.

⚠ WARNING

- **Do not perform any operation on the product (including but not limited to, handling, installing, powering on, or maintaining the product, performing electrical connection, and working at heights) in harsh weather conditions, such as thunder and lightning, rain, snow, and Level 6 or stronger winds. SUNGROW shall not be held liable for any damage to the device due to force majeure, such as earthquakes, floods, volcanic eruptions, mudslides, lightning strikes, fires, wars, armed conflicts, typhoons, hurricanes, tornadoes, and other extreme weathers.**
- **In case of fire, evacuate from the building or product area and call the fire alarm. Re-entry into the burning area is strictly prohibited under any circumstances.**

NOTICE

- **Tighten the screws with the specified torque using tools when fastening the product and terminals. Otherwise, the product may be damaged. And the damage caused is not covered by the warranty.**
- **Learn how to use tools correctly before using them to avoid hurting people or damaging the device.**
- **Maintain the device with sufficient knowledge of this manual and use proper tools.**

- The safety instructions in this manual are only supplements and cannot cover all the precautions that should be followed. Perform operations considering actual onsite conditions.
- SUNGROW shall not be held liable for any damage caused by violation of general safety operation requirements, general safety standards, or any safety instruction in this manual.
- When installing, operating, and maintaining the product, comply with local laws and regulations. The safety precautions in this manual are only supplements to local laws and regulations.
- During the product transport, installation, wiring, maintenance, etc., the materials and tools prepared by users must meet the requirements of applicable local laws and regulations, safety standards, and other specifications. SUNGROW shall not be held liable for any damage to the product caused by the adoption of materials and tools that fail to meet the above-mentioned requirements.
- Operations on the product, including but not limited to, handling, installing, wiring, powering on, maintenance, and use of the product, must not be performed by unqualified personnel. SUNGROW shall not be held liable for any damage to the product resulting from operations done by unqualified personnel.
- Where the transport of the product is arranged by users, SUNGROW shall not be held liable for any damage to the product that is caused by users themselves or the third-party transport service providers designated by the users.
- SUNGROW shall not be held liable for any damage to the product caused by the negligence, intent, fault, improper operation, and other behaviors of users or third-party organizations.
- SUNGROW shall not be held liable for any damage to the product arising from reasons unrelated to SUNGROW.

1.1 Unpacking and Inspection

⚠ WARNING

- **Check all safety signs, warning labels and nameplates on devices.**
- **The safety signs, warning labels and nameplates must be clearly visible and cannot be removed or covered before the device is decommissioned.**

NOTICE

After receiving the product, check whether the appearance and structural parts of the device are damaged, and check whether the packing list is consistent with the actual ordered product. If there are problems with the above inspection items, do not install the device and contact your distributor first. If the problem persists, contact SUNGROW in time.

1.2 Installation Safety

⚠ DANGER

- **Make sure there is no electrical connection before installation.**
- **Before drilling, avoid the water and electricity wiring in the wall.**

⚠ CAUTION

Improper installation may cause personal injury!

- **If the product supports hoisting transport and is hoisted by hoisting tools, no one is allowed to stay under the product.**
- **When moving the product, be aware of the product weight and keep the balance to prevent it from tilting or falling.**

NOTICE

Before operating the product, must check and ensure that tools to be used have been maintained regularly.

1.3 Electrical Connection Safety

⚠ DANGER

- **Before electrical connections, please make sure that the inverter is not damaged, otherwise it may cause danger!**
- **Before electrical connections, please make sure that the inverter switch and all switches connected to the inverter are set to "OFF", otherwise electric shock may occur!**

⚠ DANGER

The PV string will generate lethal high voltage when exposed to sunlight.

- **Operators must wear proper personal protective equipment during electrical connections.**
- **Must ensure that cables are voltage-free with a measuring instrument before touching DC cables.**
- **Respect all safety instructions listed in relevant documents about PV strings.**
- **The inverter must not be connected to a PV string that requires positive or negative grounding.**

⚠ DANGER

Danger to life due to a high voltage inside the inverter!

- **Be sure to use special insulation tools during cable connections.**
- **Note and observe the warning labels on the product, and perform operations strictly following the safety instructions.**
- **Respect all safety instructions listed in this manual and other pertinent documents.**

⚠ WARNING

Damage to the product caused by incorrect wiring is not covered by the warranty.

- **Electrical connection must be performed by professionals.**
- **All cables used in the PV generation system must be firmly attached, properly insulated, and adequately dimensioned.**

⚠ WARNING

- **Check the positive and negative polarity of the PV strings, and connect the PV connectors to corresponding terminals only after ensuring polarity correctness.**
- **During the installation and operation of the inverter, please ensure that the positive or negative poles of PV strings do not short-circuit to the ground. Otherwise, an AC or DC short-circuit may occur, resulting in equipment damage. The damage caused by this is not covered by the warranty.**
- **Do not connect any load between the inverter and the AC circuit breaker directly connected to it, so as to prevent the switch from tripping by mistake.**
- **Determine the specifications of AC circuit breakers strictly in compliance with the applicable local laws and regulations and safety standards or the recommendation by SUNGROW. Otherwise, the switch may not open in time in the event of something abnormal, which may then lead to safety incidents.**

NOTICE

Comply with the safety instructions related to PV strings and the regulations related to the local grid.

1.4 Operation Safety

⚠ DANGER

When routing cables, ensure a distance of at least 30 mm between the cables and heat-generating components or areas to protect the insulation layer of cables from aging and damage.

⚠ DANGER

When the product is working:

- **Do not touch the product enclosure.**
- **It is strictly forbidden to plug and unplug any connector on the inverter.**
- **Do not touch any wiring terminal of the inverter. Otherwise, electric shock may occur.**
- **Do not disassemble any parts of the inverter. Otherwise, electric shock may occur.**
- **It is strictly forbidden to touch any hot parts of the inverter (such as the heat sink). Otherwise, it may cause burns.**
- **Do not connect or remove any PV string or any PV module in a string. Otherwise, electric shock may occur.**

Do not take other actions, such as setting parameters or cutting off power, during the process of inverter firmware update, to avoid update failure.

1.5 Maintenance Safety

⚠ DANGER

Risk of inverter damage or personal injury due to incorrect service!

- **Before maintenance, disconnect the AC circuit breaker on the grid side and then the DC switch. If a fault that may cause personal injury or device damage is found before maintenance, disconnect the AC circuit breaker and wait until the night before operating the DC switch. Otherwise, a fire inside the product or an explosion may occur, causing personal injuries.**
- **After the inverter is powered off for 25 minutes, measure the voltage and current with professional instrument. Only when there is no voltage nor current can operators who wear protective equipment operate and maintain the inverter.**
- **Even if the inverter is shut down, it may still be hot and cause burns. Wear protective gloves before operating the inverter after it cools down.**
- **Do not stand directly in front of the equipment when it is operating. Whenever possible, operate the equipment from the side or rear to reduce the risk of accidents.**

⚠ DANGER

Touching the power grid or the contact points and terminals on the inverter connected to the power grid may lead to electric shock!

- **The power grid side may generate voltage. Always use a standard voltmeter to ensure that there is no voltage before touching.**

⚠ CAUTION

To prevent misuse or accidents caused by unrelated personnel, post prominent warning signs or demarcate safety warning areas around the product.

NOTICE

To avoid the risk of electric shock, do not perform any other maintenance operations beyond this manual. If necessary, contact SUNGROW for maintenance. Otherwise, the losses caused is not covered by the warranty.

NOTICE

- **If the paint on the inverter enclosure falls or rusts, repair it in time. Otherwise, the inverter performance may be affected.**
- **Do not use cleaning agents to clean the inverter. Otherwise, the inverter may be damaged, and the loss caused is not covered by the warranty.**
- **As the inverter contains no parts that can be maintained, never open the enclosure of the inverter or replace any internal components without authorization. Otherwise, the loss caused is not covered by the warranty.**
- **Do not open the maintenance door in rainy or snowy weather. If it is inevitable, take proper protective measures to avoid the ingress of rainwater and snow into the maintenance compartment; otherwise, the product's operation may be affected.**
- **Before closing the maintenance door, check whether there is any object left inside the maintenance compartment, such as screws, tools, etc.**
- **It is recommended for users to use cable sheathing to protect the AC cable. If the cable sheathing is used, make sure it is positioned inside the maintenance compartment.**

1.6 Disposal Safety

⚠ WARNING

Please scrap the product in accordance with relevant local regulations and standards to avoid property losses or casualties.

2 Product Description

2.1 System Introduction

The inverter is a transformerless 3-phase PV grid-connected inverter. As an integral component in the PV power system, the inverter is designed to convert the direct current power generated from the PV modules into grid-compatible AC current and to feed the AC current into the utility grid.

⚠ WARNING

Do not connect any local load between the inverter and the AC circuit breaker except for the tracking axis.

NOTICE

When designing the system, ensure that the operating ranges of all devices that are connected to the inverter meet the requirements of the inverter.
The PV modules in the system must comply with the IEC 61730-1 (2016) class II standard.
The inverter is only applicable to the scenarios described in the manual and cannot be used in other situations.

The intended usage of the inverter is illustrated in the following figure.

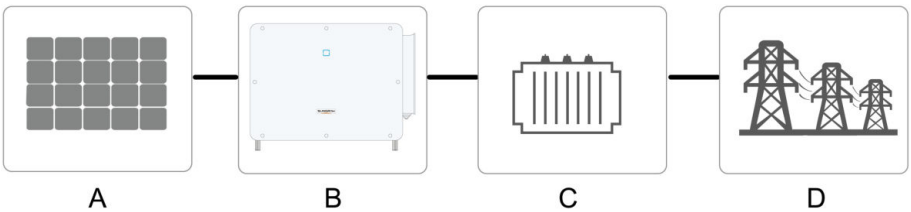

Figure 2-1 Inverter Application in PV Power System

Item	Description	Note
A	PV strings	Monocrystalline silicon, polycrystalline silicon and thin-film without grounding
B	Inverter	SG285HX / SG320HX / SG333HX / SG350HX
C	Transformer	Raises the output voltage of the inverter to a level that meets the requirements of the grid

Item	Description	Note
D	Utility grid	The grid form supported by the inverter is shown in the figure below

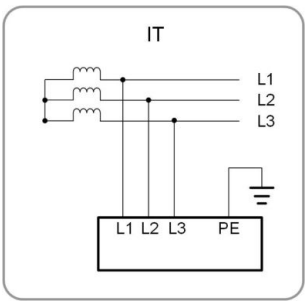

2.2 Product del producto

Model Description

The model description is as follows (take SG350HX as an example).

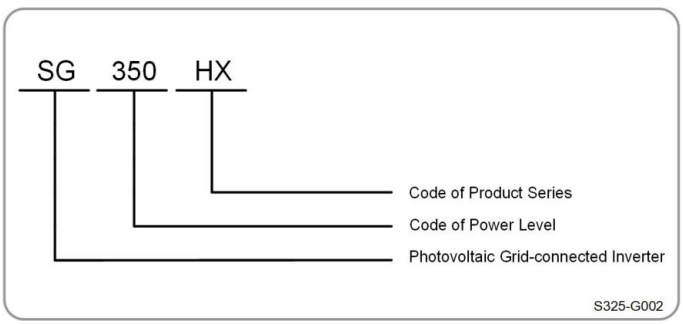

Appearance

The following figure shows the appearance of the inverter.

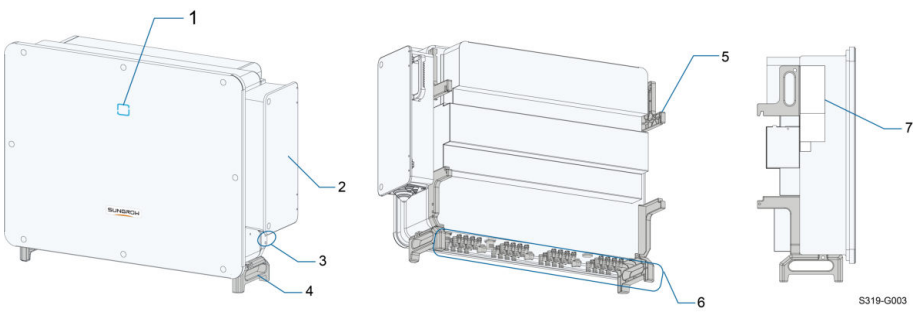

Figure 2-2 Appearance

The image shown here is for reference only. The actual product received may differ.

No.	Name	Description
1	LED indicator	To indicate the current working state of the inverter.
2	AC junction box	To connect AC cable and tracking system power cable in this area.
3	External protective grounding terminals	2, use at least one of them to ground the inverter.
4	Bottom handles	2, used to move the inverter.
5	Mounting lugs	4, used to hang the inverter onto the mounting-bracket.
6	Wiring area	DC switches, DC terminals, and communication terminals. For details, refer to 5.2 Terminal Description.
7	Labels	To clearly identify the product, including nameplate, warning symbols and QR code.

Dimensions

The following figure shows the dimensions of the inverter.

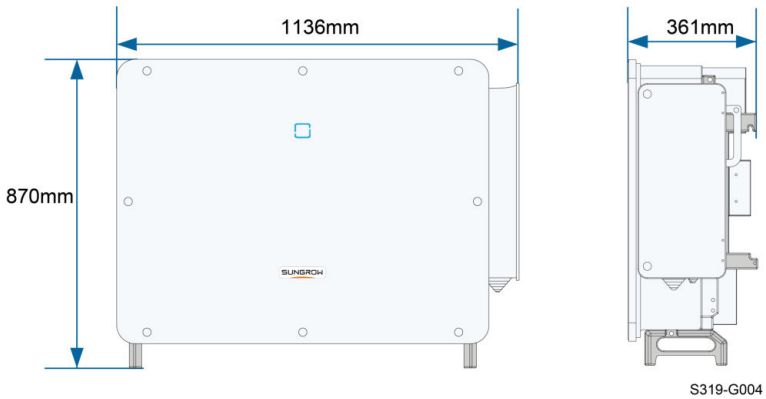

Figure 2-3 Product Dimensions(in mm)

Weight

Model	Weight
SG285HX / SG320HX / SG333HX / SG350HX	≤ 116 kg

2.3 Symbols on Product

Symbol	Explanation
	Do not dispose of the inverter together with household waste.
	Read the user manual before maintenance!
	TUV mark of conformity.
	CE mark of conformity. EU/EEA Importer
	UKCA mark of conformity. The height of the label should not exceed 5 mm.
	Disconnect the inverter from all the external power sources before maintenance!
	Burn danger due to the hot surface that may exceed 60℃.
	Danger to life due to high voltages! Do not touch live parts for 25 minutes after disconnection from the power sources. Only qualified personnel can open and maintain the inverter.
	External protective grounding terminal.

2.4 LED Indicator

The LED indicator on the front of the inverter indicates the working state of the inverter.

Table 2-1 LED Indicator State Description

LED Color	State	Definition
 Blue	On	The device is connected to the grid and operating normally.
	Fast blink (Period: 0.2s)	The Bluetooth connection is established, and there is data communication. No system fault occurs.
	Slow blink (Period: 2s)	The device is in standby or startup state (not feeding power into the grid).
	Slow blink once, fast blink three times	The inverter is performing PID recovery.
 Red	On	A fault occurs and the device cannot connect to the grid.
	Blink	The Bluetooth connection is established, data communication in process, and a system fault occurs.
 Gray	OFF	Both the AC and DC sides are powered down.

⚠ WARNING

Voltage may still be present in AC side circuits after the indicator is off. Pay attention to the electricity safety when operating.

2.5 DC Switch

The inverter is equipped with four DC switches which can safely disconnect it from PV strings. Each switch controls the DC terminals in the area where the switch is located.

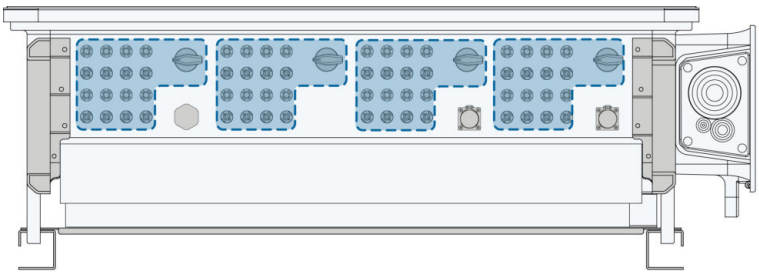

2.6 Circuit Diagram

The following figure shows the main circuit of the inverter.

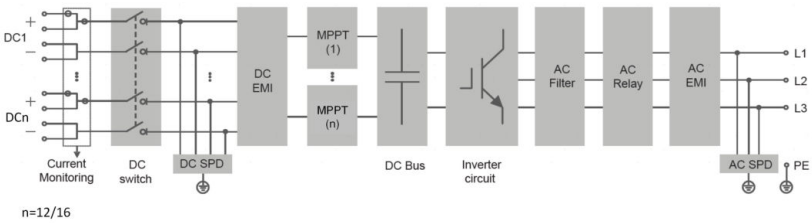

Figure 2-4 Circuit Diagram

- DC Switches can safely disconnect the PV input when necessary to ensure the safe operation of the inverter and the safety of personnel.
- The DC SPD provides a discharge circuit for the DC side overvoltage to prevent it from damaging the internal circuits of the inverter.
- EMI filters can filter out the electromagnetic interference inside the inverter to ensure that the inverter meets the requirements of electromagnetic compatibility standards.
- The MPPT is used to ensure a maximum power from PV arrays at different PV input conditions.
- The Inverter Circuit converts the DC power into grid-compliant AC power and feeds it into the grid.
- The AC filter filters the output AC component of high frequency to ensure that the output current meets the grid requirements.
- The AC relay isolates the AC output of the inverter from the grid, making the inverter safe from the grid in case of inverter failure or grid failure.
- The AC SPD provides a discharge circuit for the AC side overvoltage to prevent it from damaging the internal circuits of the inverter.

⚠ DANGER

If the lightning level exceeds the protection level of the product, surge protection and overvoltage protection may fail, resulting in electric shock and fatal injury!

2.7 Function Description

The inverter is equipped with the following functions:

Conversion Function

The inverter converts the DC current into grid-compatible AC current and feeds the AC current into the grid.

Data Storage

The inverter logs running information, error records, etc.

Parameter Configuration

The inverter provides various settable parameters. Users can set parameters via the App to meet the requirements and optimize the performance.

Communication Interface

The inverter is designed with standard RS485 communication interfaces.

The standard RS485 communication interfaces are used to establish communication connection with monitoring devices and upload monitoring data by using communication cables. After communication connection is established, users can view inverter information or set inverter parameters through the iSolarCloud.

Protection Function

The protective functions are integrated in the inverter, including anti-island protection, LVRT, DC reverse connection protection, AC short circuit protection, leakage current protection, surge protection, etc.

Potential Induced Degradation (PID) (Optional)

NOTICE

The functions and parameter settings of PID in this manual are only applicable to DC PID. If it is equipped with AC PID, please refer to the EMU200A user manual for PID parameter settings.

The PID effect (Potential Induced Degradation) of PV modules will cause serious damage to PV yield. Through enabling the Anti-PID function, the PID can be suppressed, and this function works when the inverter is in grid-connected operation status during the day or the reactive power generation at night is enabled. Through enabling the PID recovery function, the adverse effects caused by PID can be recovered, and this function only works when the DC side of the inverter is voltage-free.

The working strategy varies with PV panel types.

- P-type panel

When the anti-PID function is enabled, the inverter rises the potential of the negative pole of PV array of P-type panels to close to the ground potential through PID module to suppress PID effect.

When the PID recovery function is enabled, the inverter rises the potential between the negative pole of PV array of P-type panels and the ground to 500Vdc through PID module, to repair the PID effect.

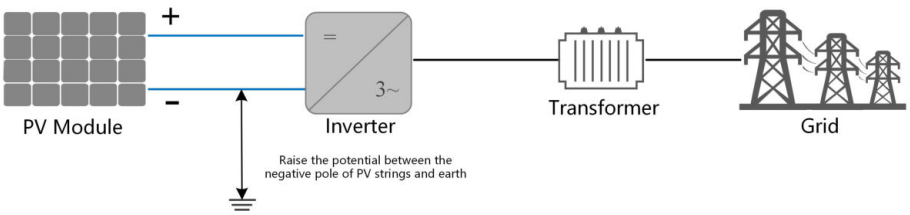

- N-type panel

The electric power engineering company and the user should confirm with the PV panel manufacturer the compensation voltage direction against PID of the selected panel when designing the plant.

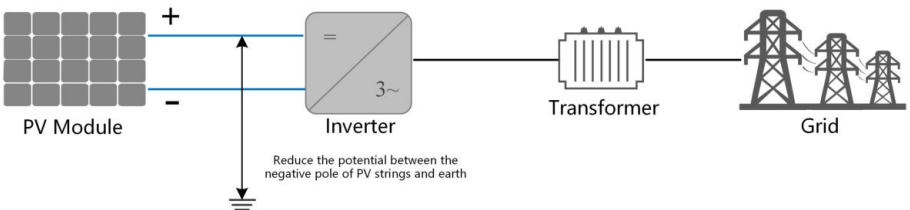

- Make sure the inverter is applied to an IT system before enabling the anti-PID function.
- PID recovery and Q at night can be enabled at the same time, but can not work at the same time. In the IT system, anti-PID and Q at night can work at the same time.
- After PID recovery is enabled, it only works when the DC side of the inverter is voltage-free.
- After the PID recovery function is enabled, the voltage of the PV string to ground is 500Vdc by default.

*:Please enable both "Availability of Q at Night during PID Recovery" and "PID Recovery" to turn on the PID recovery.

NOTICE

- **Before enabling the anti-PID function or PID recovery function, make sure the voltage polarity of the PV modules to ground meets requirement. If there are any questions, contact the PV module manufacturer or read the corresponding user manual.**
- **If the voltage scheme for the anti-PID function or PID recovery function does not meet the requirement of corresponding PV modules, the PID will not work as expected or even damage the PV modules.**
- **When the PID recovery works (the indicator blinks blue once at long intervals and three times at short intervals), disable the PID recovery function on iSolarCloud App before manually powering on and maintaining the inverter.**

3 Unpacking and Storage

3.1 Unpacking and Inspection

The product is thoroughly tested and strictly inspected before delivery. Nonetheless, damage may still occur during shipping. For this reason, please conduct a thorough inspection after receiving the product.

- Check the packing case for any visible damage.
- Check the scope of delivery for completeness according to the packing list.
- Check the inner contents for damage after unpacking.

Contact SUNGROW or the transport company in case of any damage or incompleteness, and provide photos to facilitate services.

Do not dispose of the original packing case. It is recommended to store the device in the original packing case when the product is decommissioned.

NOTICE

- **After receiving the product, check whether the appearance and structural parts of the device are damaged, and check whether the packing list is consistent with the actual ordered product. If there are problems with the above inspection items, do not install the device and contact your distributor first. If the problem persists, contact SUNGROW in time.**
- **If any tool is used for unpacking, be careful not to damage the product.**

3.2 Unpacking Steps

Step 1 Use a utility knife to cut the packing tape. Remove horizontal and vertical paper angle beads.

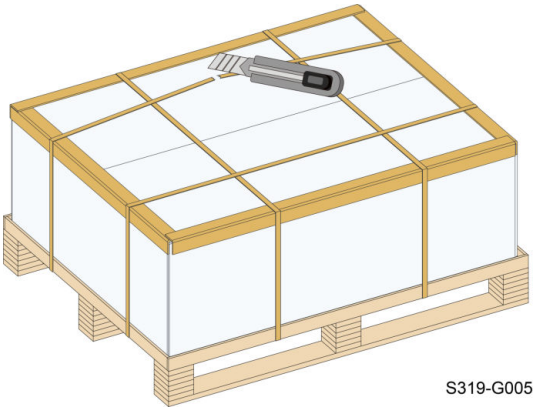

Step 2 Remove the packing box upwards.

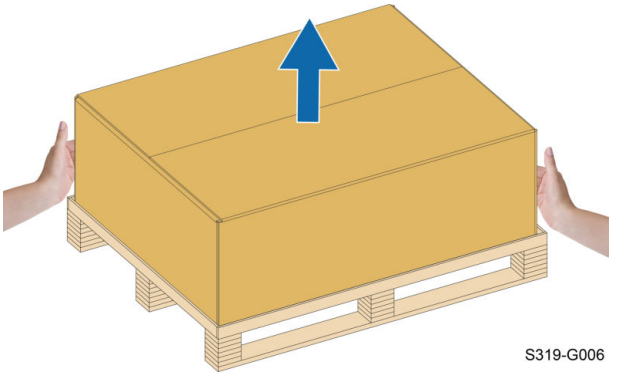

Step 3 Remove the surrounding paper angle beads.

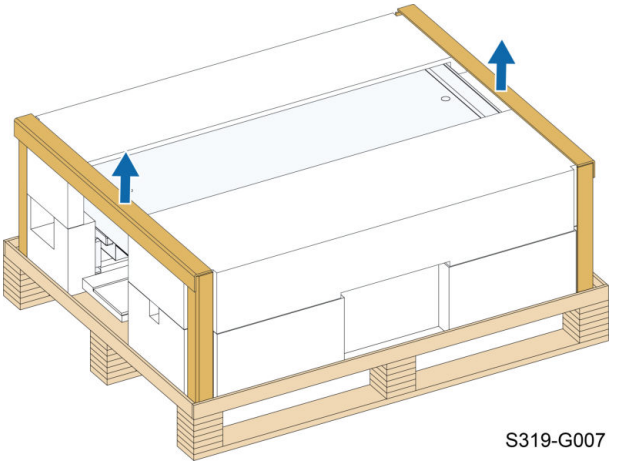

Step 4 Remove the upper cushion.

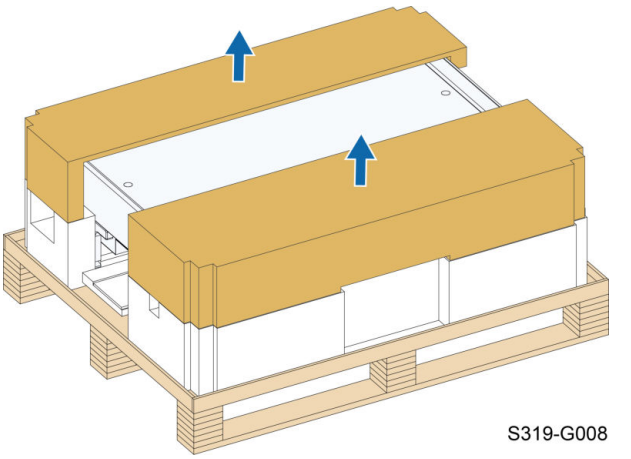

--End

3.3 Inverter Storage

Proper storage is required if the inverter is not installed immediately.

- Store the inverter in the original packing case with the desiccant inside.
- The storage temperature must be always between -40℃ and +70℃, and the storage relative humidity must be always between 0 and 95 %, non-condensing.
- In case of stacking storage, the number of stacking layers should never exceed the limit marked on the outer side of the packing case.
- The packing case should be upright.
- If the inverter needs to be transported again, pack it strictly before loading and transporting it.
- Do not store the inverter in places susceptible to direct sunlight, rain, and strong electric field.
- Do not place the inverter in places with items that may affect or damage the inverter.
- Store the inverter in a clean and dry place to prevent dust and water vapor from eroding.
- Do not store the inverter in places with corrosive substances or susceptible to rodents and insects.
- Carry out periodic inspections. Inspection shall be conducted at least once every six months. If any insect or rodent bites are found, replace the packaging materials in time.
- If the inverter has been stored for one year or longer, or has been mounted but remains non-operational for more than three months, it must be inspected and tested by qualified personnel before being put into operation.

NOTICE

Please store the inverter according to the storage requirements. Product damage caused by failure to meet the storage requirements is not covered by the warranty.

4 Mechanical Mounting

⚠ WARNING

Respect all local standards and requirements during mechanical installation.

4.1 Safety During Mounting

⚠ DANGER

Make sure there is no electrical connection before installation.
Before drilling, avoid the water and electricity wiring in the wall.

⚠ WARNING

For specific requirements for the installation environment, see 4.2.1 Installation Environment Requirements. In case the environment where the product is installed does not meet the requirements, SUNGROW shall not be held liable for any property damage arising therefrom.

⚠ CAUTION

Improper handling may cause personal injury!

- **When moving the product, be aware of its weight and keep the balance to prevent it from tilting or falling.**
- **Wear proper protective equipment before performing operations on the product.**
- **The bottom terminals and interfaces of the product cannot directly contact the ground or other supports. The product cannot be directly placed on the ground.**

NOTICE

During installation, ensure that no device in the system causes it hard for the DC switch and the AC circuit breaker to act or hinders maintenance personnel from operating.
If drilling is required during installation:

- **Wear goggles and protective gloves when drilling holes.**
- **Make sure to avoid the water and electricity wiring in the wall before drilling.**
- **Protect the product from shavings and dust.**

4.2 Location Requirements

To a large extent, a proper installation location ensures safe operation, service life, and performance of the inverter.

- The inverter with protection rating IP66 can be installed both indoors and outdoors.
- The inverter should be installed at a height that allows easy viewing of the LED indicator panel, as well as easy electrical connection, operation and maintenance.

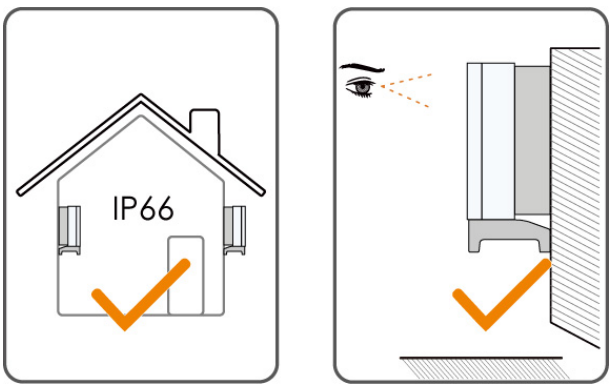

4.2.1 Installation Environment Requirements

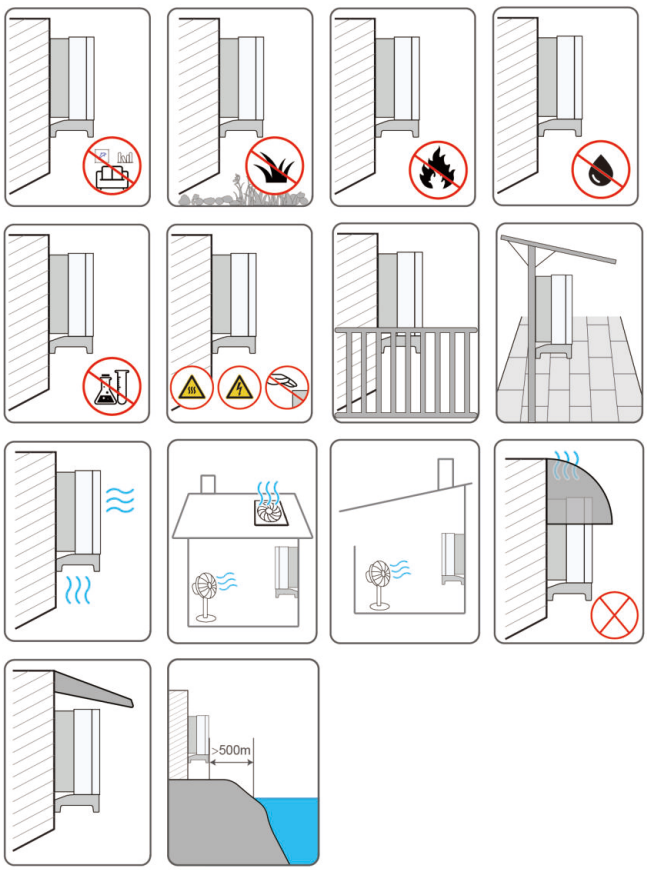

- The inverter produces noise during operation, thus it is not recommended to install it in places for residential purposes. If this cannot be avoided, it is recommended to install the inverter in a place over 25 meters away from the residential area, or take noise mitigation measures.
- If the inverter is installed in a place with lush vegetation, weed on a regular basis. In addition, the ground beneath the inverter needs to undergo certain treatment, such as laying cement or gravel, etc. (an area of 3 m × 2.5 m is recommended).
- Do not install the inverter in an environment with flammables, explosives, or smoke.
- Do not install the inverter in places prone to water leak, e.g., under the air-conditioner vent, the air vent, or the cable outlet window of the machine room, so as to prevent device damage or short circuit caused by intrusion of water.
- Do not install the inverter in a place with corrosives such as corrosive gas and organic solvent, etc.
- When the inverter is running, its surface may carry high voltages or get very hot. Do not touch it; otherwise, it may lead to burns or electric shocks.
- Do not install the inverter in a place that can be easily reached.
- The installation site must have solid ground, free of rubber-like soils (which cannot be effectively compacted) or weak soils, and should not be prone to subsidence. Also, avoid low-lying areas where water or snow may accumulate. Ensure the site is located above the highest recorded water level in the area.
- Do not install the inverter in a position that could be flooded.
- To prevent vegetation or water on the ground from impacting inverter operation, if the space above meets the designated requirements, elevate the inverter to an appropriate height.
- It is suggested to install the inverter in a place with shelter, or build a sunshade for it. However, if the ambient temperature around the inverter is >45℃ and the irradiance is greater than 1000W/m², install it in a place with shelter only, to avoid derating caused by direct sunlight.
  ((The ambient temperature is determined as the average temperature measured from at least four evenly distributed temperature monitoring points, located at least 1 meter from the device and at a height halfway up the device. The temperature sensors must be shielded from airflow, thermal radiation, and rapid temperature fluctuations to prevent inaccuracies in the readings.))
- Good heat dissipation is very important to the inverter. Please install the inverter in a ventilated environment.
- Expanding foam and firestop putty shall meet applicable national standards and remain free of corrosive gas emissions (e.g., chlorine, ammonia, and sulfur) at operating temperatures from -40°C to 85°C. Use only halogen-free, eco-friendly sealing materials.
- If the inverter needs to be installed in a closed or semi-closed environment, please install additional heat dissipation or ventilation devices. Furthermore, while the inverter is operating, ensure the indoor ambient temperature does not exceed the outdoor ambient temperature. A semi-closed environment refers to a special space where

natural ventilation is limited and gas or heat may easily accumulate, although it is not fully enclosed on all six sides.

- Please consult SUNGROW before installing inverters outdoors in areas prone to salt damage, which are mainly coastal areas within 500 meters of the sea. The sedimentation amount of salt spray is correlated to the characteristics of the seawater, sea winds, precipitation, air humidity, topography, and forest coverage in the adjacent sea areas, and there are substantial differences between different coastal areas.
- To ensure device safety and service life, avoid using this product in highly polluted environments containing substances such as sulfur or halogens.
- The inverter is strictly prohibited from being installed in environments with vibration or strong electromagnetic fields (including strong common-mode interference). A strong magnetic field environment refers to one where the magnetic field strength exceeds 30 A/m. The aforementioned environments may cause the product to malfunction.
- In dusty environments, such as areas with large amounts of dust, smoke, or lint, airborne particles may accumulate on the device's air outlet or heat sink, affecting heat dissipation and, in severe cases, causing damage to the device.In dusty environments, such as areas with large amounts of dust, smoke, or lint, airborne particles may accumulate on the device's air outlet or heat sink, affecting heat dissipation and, in severe cases, causing damage to the device.
  The average temperature approximately 1 m around the inverter should be taken as its ambient operating temperature. The temperature and humidity should meet the requirements below:

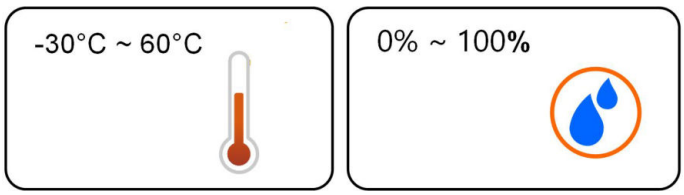

- Requirements for the inverter which has been installed but not put into use for a long time:
  - Be sure to use the blue plugs, which come with the inverter, to close off the unused DC terminals.
  - If the inverter is installed in a sandy and windy environment, please add safeguards against sand and dust on the air inlet and outlet of the air duct, so as to avoid impacts on fan operation caused by air duct blockage. Please remove the safeguards before putting the inverter into operation.

4.2.2 Carrier Requirements

The mounting structure where the inverter is installed must comply with local/national standards and guidelines. Ensure that the installation surface is solid enough to bear four times the weight of the inverter and is suitable for the dimensions of the inverter (e.g. cement walls, plasterboard walls, etc.).

Do not install the inverter on a carrier that may vibrate in resonance, so as to avoid making bigger noise.

Installation on combustible building materials is strictly prohibited. Suitable mounting surfaces include:

Non-combustible wall surfaces: Concrete, fire-resistant gypsum board, brick wall, etc. Non-combustible roof structures: Color-Coated corrugated steel roofing sheets, precast concrete slabs, fiber-reinforced cement boards, etc.

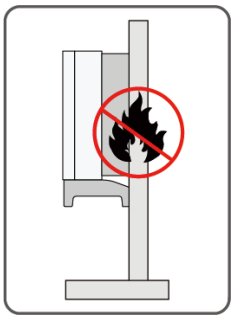

4.2.3 Angle Requirements

Install the inverter vertically or tilt backwards. Do not install the inverter horizontally, forward, excessively backward, sideways, or upside down.

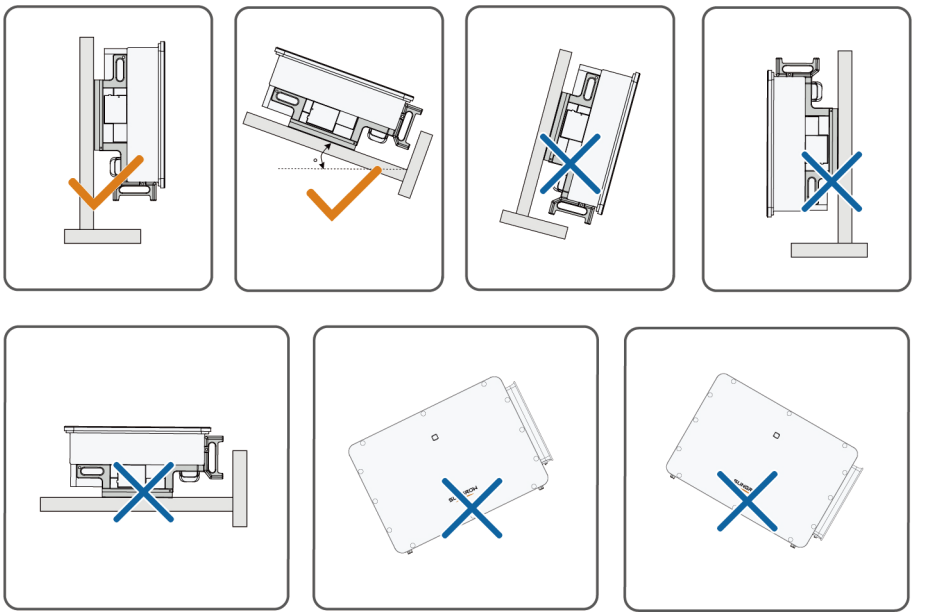

In case the installation site is a level surface, mount the inverter to the bracket to meet the mounting angle requirements, as shown in the figure below.

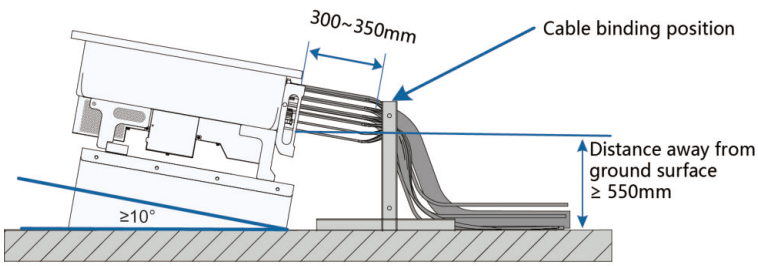

Take the following items into account when designing the bracket scheme:

- Consider onsite climate conditions and take anti-snow and anti-rain measures if necessary.
- Ensure that the waterproof connectors are at least 550 mm higher than the ground surface.
- Bind the cables at the positions 300~350 mm away from the DC connector, AC waterproof terminal, and communication waterproof terminal.
- The various waterproof terminals should be tightened with the torque specified in this manual to ensure that they are securely sealed.

Contact SUNGORW if you have any question.

4.2.4 Installation space required for the inverter with air outlets on the side (standard configuration)

The inverter with air outlets on the side is the standard configuration. For related installation space requirements, please refer to the following details.

Space around the inverter

Make sure there is sufficient space around the inverter for good ventilation. The space requirements for installing a single inverter are shown in the figure below.

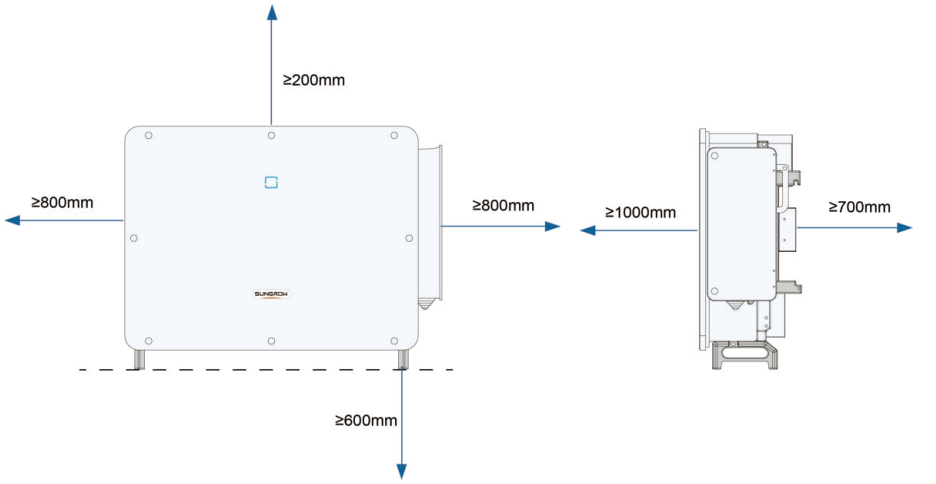

NOTICE

- **To prevent vegetation or water on the ground from impacting inverter operation, if the space above meets the designated requirements, elevate the inverter to an appropriate height.**
- **The space at the bottom of the inverter must accommodate the required bending radius for the AC output cables.**

Run the AC cable into the AC terminal vertically, and make sure the cable is kept vertical for a length of ≥200mm.

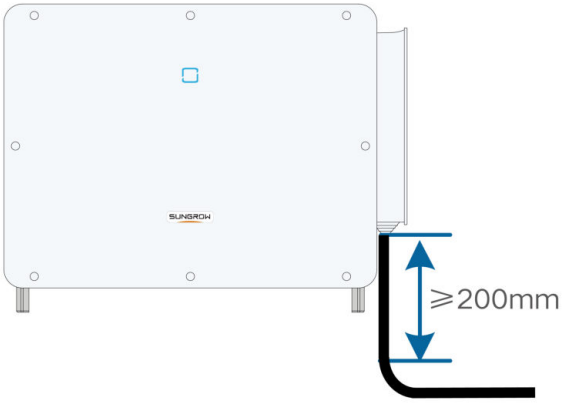

Air inlets/outlets of the inverter

Make sure there is no obstruction to the inverter's air inlets/outlets, to avoid impacting its heat dissipation. The air inlets/outlets of the inverter are shown in the figure below.

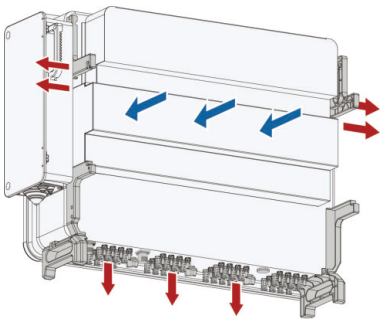

Inverters installed against the wall

If the inverter is installed against the wall, keep it at least 700mm away from the wall.

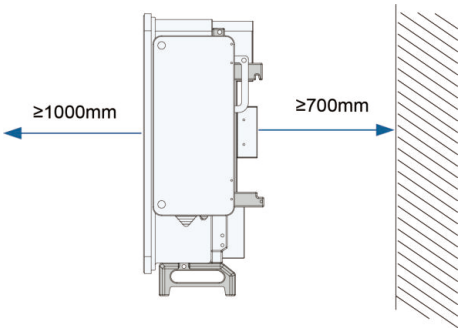

Inverters installed in one row

When installing multiple inverters, reserve sufficient space between the inverters. It is recommended to position them in one row.



Inverters installed back-to-back

For two inverters installed back-to-back, the distance between them should be at least 600mm.

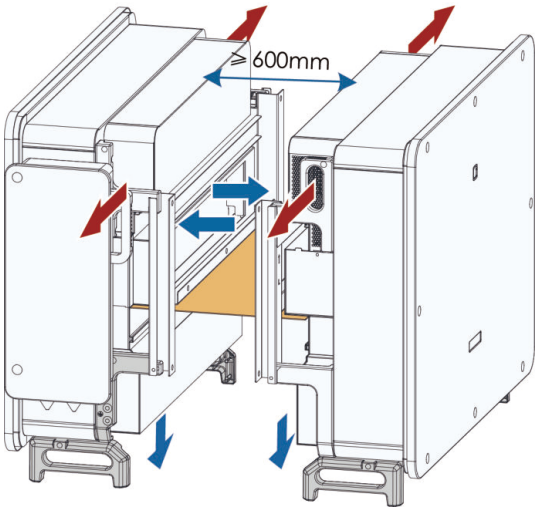

When installing more than two inverters back-to-back, sufficient space should be reserved between the adjacent inverters.

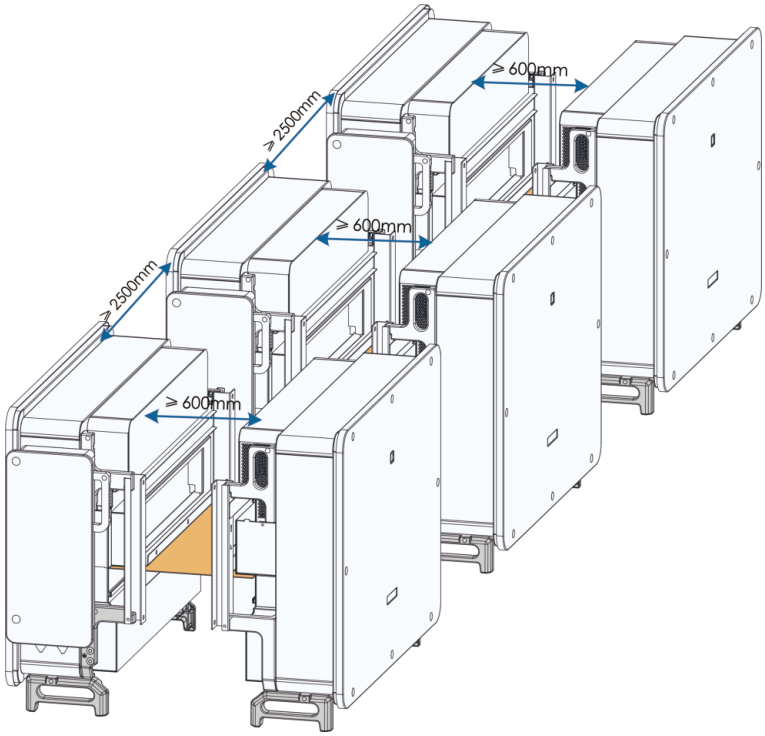

If the above installation requirements cannot be met, please contact SUNGROW for support.

4.3 Installation Tools

Installation tools include but are not limited to the following recommended ones. If necessary, use other auxiliary tools on site.

Table 4-1 Tool specification

	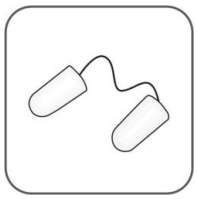	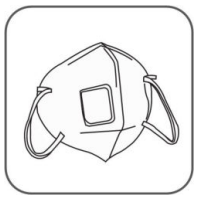	
Goggles	Earplugs	Dust mask	Safety gloves
			
Safety shoes	Utility knife	Slotted screwdriver (M2, M3, M6)	Phillips screwdriver (M4, M6, M8)
			
Hammer drill (φ12)	Pliers	Marker	Level
			
Rubber mallet	Socket wrench set (M4, M8, M12)	Open-end wrench (16 mm, 35 mm)	Anti-static wrist strap

		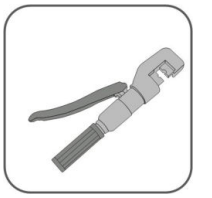	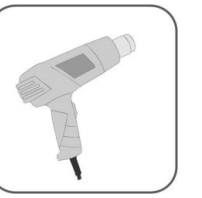
Wire cutter	Wire stripper	Hydraulic plier	Heat gun
	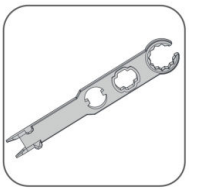	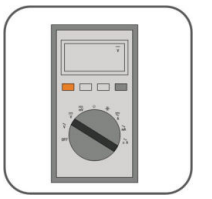	
crimping tool(4–6mm^2) Model: PV-CZM-41100 Manufacturer: STAUBLI	Connector wrench	Multimeter (≥ 1500 Vdc)	Vacuum cleaner
		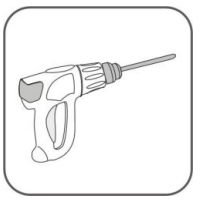	
Scissors	Hexagon socket wrench (T30)	Electric drill (φ12)	

4.4 Moving Inverter

Move the inverters by carrying them manually or using a hoisting tool based on site conditions.

⚠ CAUTION

Improper handling may cause personal injury!

- **Arrange an appropriate number of personnel to carry the inverter according to its weight, and installation personnel should wear protective equipment such as anti-impact shoes and gloves.**
- **Attention must be paid to the center of gravity of the inverter to avoid tilting during handling.**
- **Placing the inverter directly on a hard ground may cause damage to its metal enclosure. Protective materials such as sponge pad or foam cushion should be placed underneath the inverter.**
- **Move the inverter by holding the handles on it. Do not move the inverter by holding the terminals.**

4.4.1 Manual Transport

Install the four screw-in handles that are provided to the inverter lugs and the base. Lift and move the inverter to the destination by holding the bottom handles and the four installed handles.

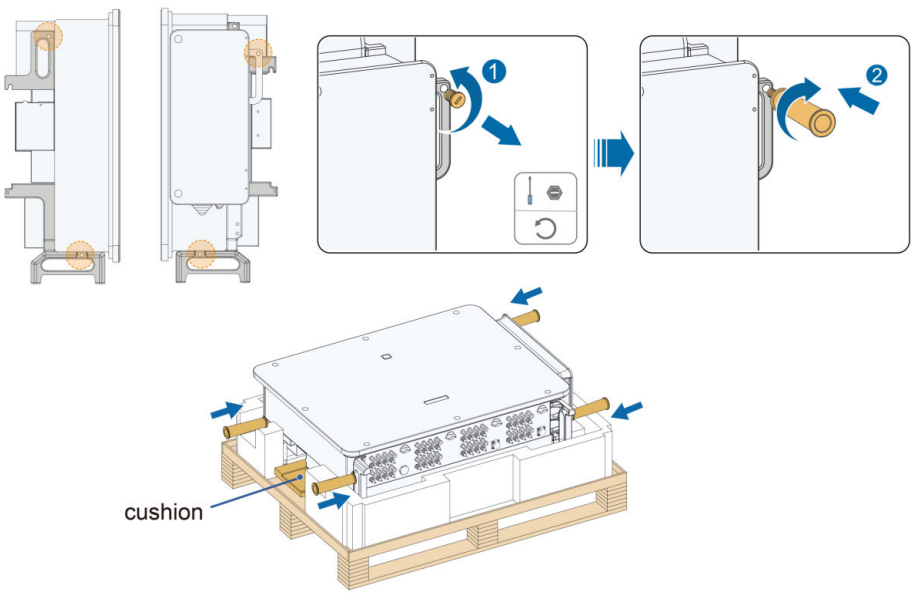

NOTICE

When handling the inverter, do not remove the cushion to avoid damage to the housing or bottom terminals.

4.4.2 Hoisting Transport

Prerequisite

Table 4-2 Tools

Device Name	Requirement	Source
Crane	Load bearing capacity ≥ 180 kg	Not included in the scope of delivery
Lifting ring	2, M12, load bearing capacity of a single ring ≥ 260 kg	Not included in the scope of delivery
Sling	1, length ≥ 2.5 m, load bearing capacity of a single sling ≥ 600 kg	Not included in the scope of delivery

Step 1 Release the sealing screws on the mounting lugs and store them properly. Anchor two M12 thread lifting rings to the lugs of the inverter.

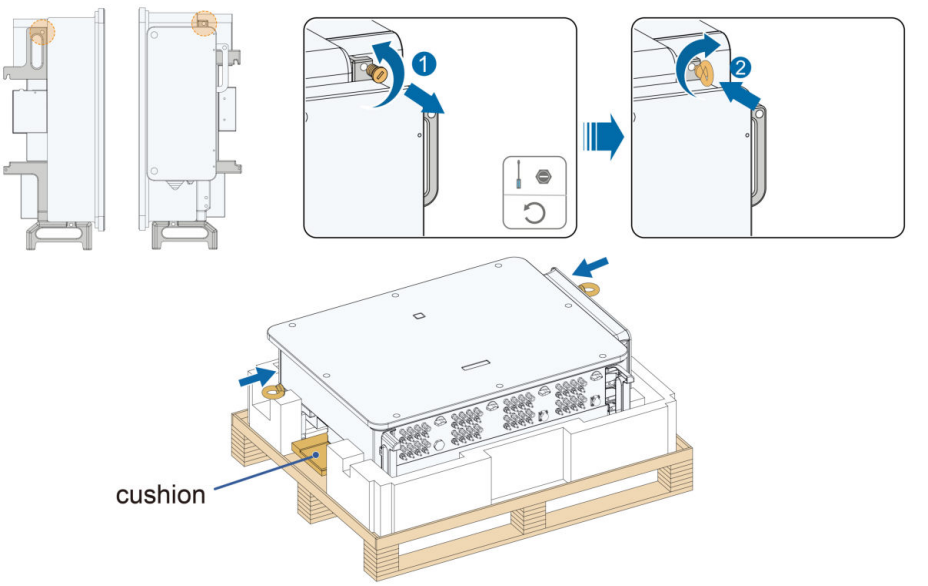

NOTICE

When handling the inverter, do not remove the cushion to avoid damage to the housing or bottom terminals.

Step 2 Lead the sling through the two lifting rings and fasten the tie-down strap.

Step 3 Hoist the inverter, and stop to check for safety when the inverter is 100 mm above the ground. Continue hoisting the device to the destination after ensuring the safety.

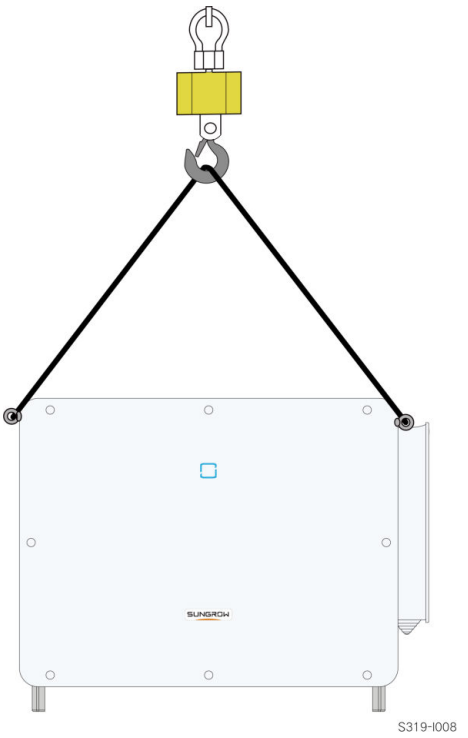

Step 4 Remove the lifting rings and reassemble the sealing screws released in Step 1.

⚠ CAUTION

Keep the inverter balanced throughout the hoisting process and avoid collisions with walls or other objects. Stop hoisting in the event of severe weather, such as heavy rain, thick fog, or strong wind.

The lifting rings and the sling are not within the delivery scope.

--End

4.5 Installing Mounting-bracket

The inverter can be installed on a bracket, a wall, and a pole by means of mounting-bracket.

Dimensions of the assembled mounting-bracket are as follows.

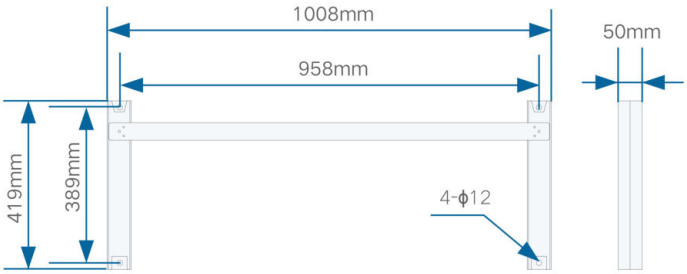

Reserve enough space when installing the mounting-bracket to meet the installation space requirements of the inverter.

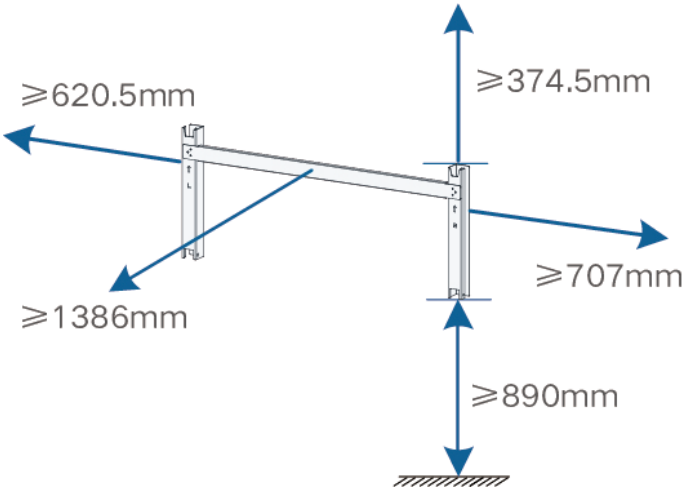

4.5.1 Bracket-Mounted Installation

Prerequisite

Tools

Item	Specification
Phillips screwdriver	M4
Marker	-
Level	-
Electric drill	Drill bit: φ12
Wrench	Opening: 16 mm

Spare parts

Item	Quantity	Specification	Source
Grub screw	2	M4×10	Delivery scope

Item	Quantity	Specification	Source
Bolt assembly	4	M10	Delivery scope

Step 1 Assemble the mounting-bracket.

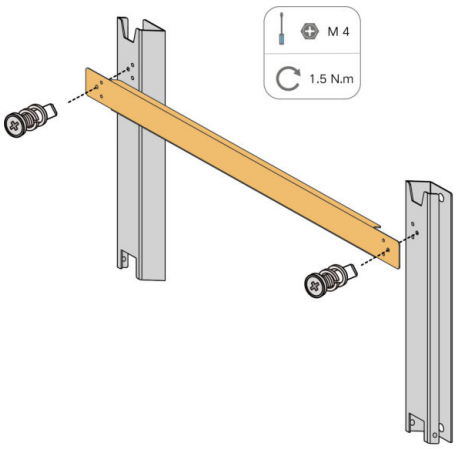

Step 2 Place the assembled mounting-bracket onto the PV bracket.Adjust the angle with a level and mark positions for drilling holes. Drill the holes by using an electric drill.

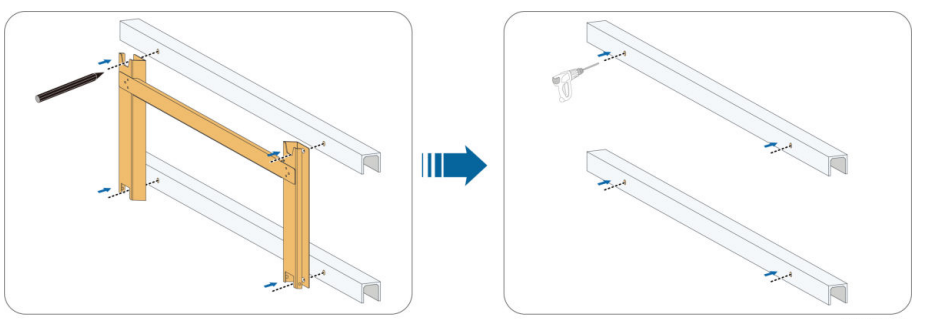

Step 3 Secure the mounting-bracket with bolts.

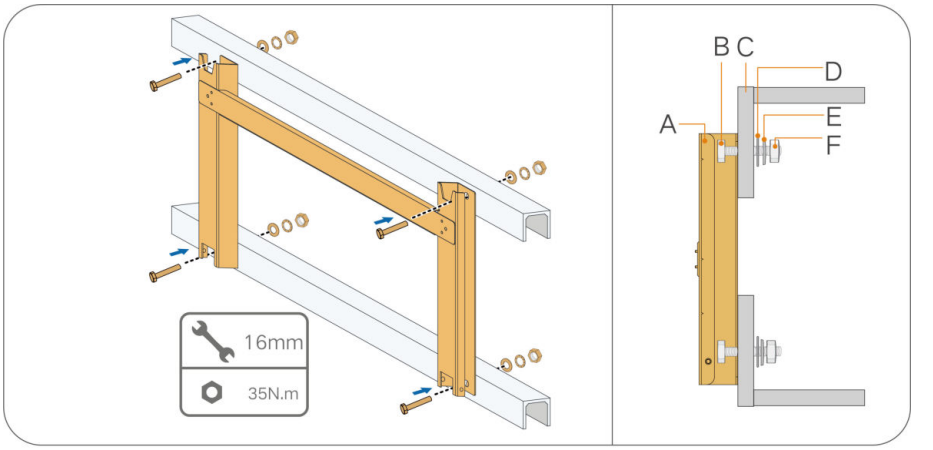

(A) Mounting-bracket	(B) Full threaded bolt	(C) Metal bracket
(D) Flat washer	(E) Spring washer	(F) Hex nuts

--End

4.5.2 Pole-Mounting

Prerequisite

Tools

Item	Specification
Phillips screwdriver	M4
Marker	—
Level	—
Electric drill *	Drill bit: φ12
Wrench	Opening: 16 mm

* Check whether other tools are needed according to the specification of clamp bolts.

Spare parts

Item	Quantity	Specification	Source
Grub screw	2	M4×10	Delivery scope
Bolt assembly	4	M10	Delivery scope

Item	Quantity	Specification	Source
Nut assembly	4	M10	Self-prepared
U-beam	2	—	Self-prepared
Clamp	2	Determined by pole size	Self-prepared

Step 1 Bury the pole into the installation site.

Please skip this step if the inverter is to be installed on a concrete post, PV bracket, etc.

Step 2 Assemble the mounting-bracket.

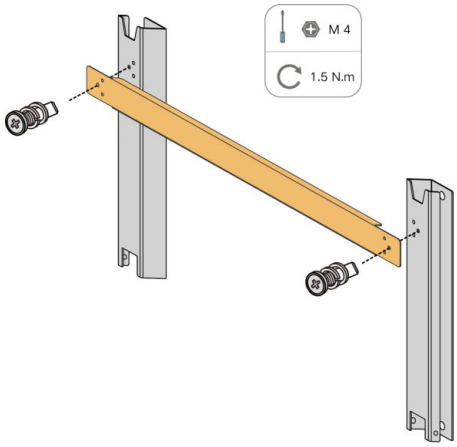

Step 3 Mark and punch holes in the U-beam according to the dimensions shown below.

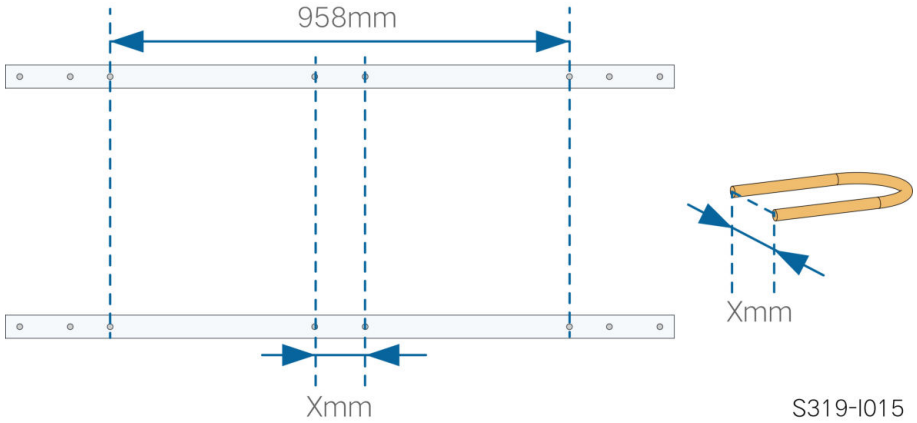

Step 4 Use bolts and clamps to fix the U-beam to the pole.

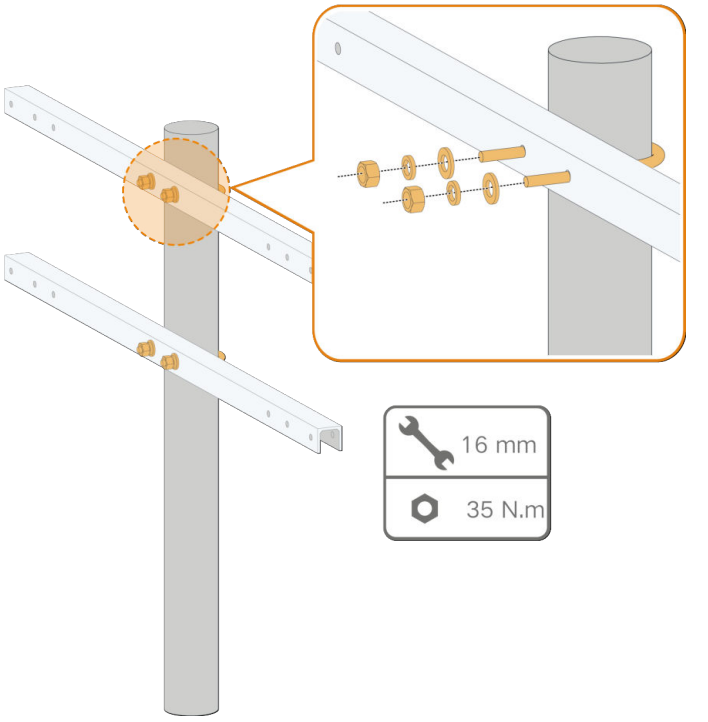

Step 5 Use bolts to secure the mounting-bracket to the U-beam.

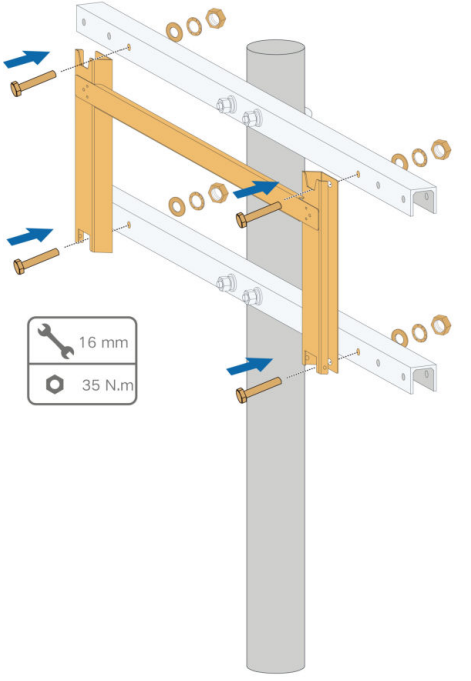

--End

4.6 Installing the Inverter

Prerequisite

Tools

Item	Specification
Phillips screwdriver	M6

Spare parts

Item	Quantity	Specification	Source
Grub screw	2	M6×65	Delivery scope

Step 1 If the installation position is high, hoist the inverter to the position (refer to 4.4.2 Hoisting Transport). Otherwise, skip this step.

Step 2 Remove the bottom cushion and lift the inverter onto the mounting-bracket. Make sure that the mounting lugs fit well into the grooves of the mounting-bracket.

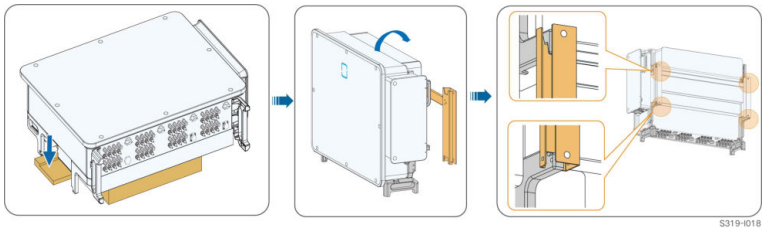

Step 3 Fix the inverter with screws.

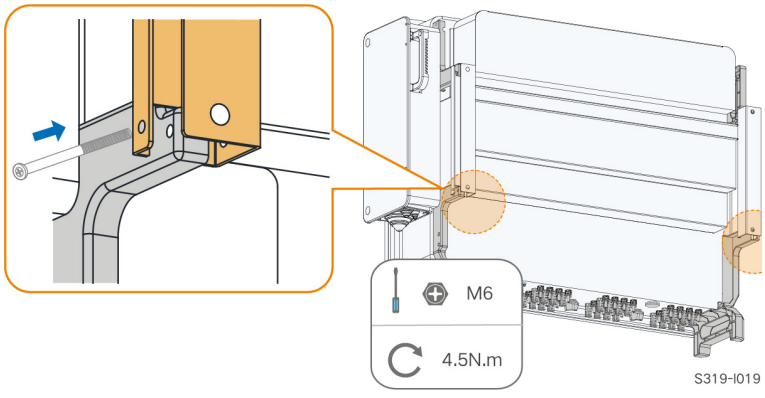

NOTICE

It is necessary to secure the left and right sides of the inverter to the mounting-bracket with screws, otherwise the inverter may become unstable.

--End

5 Electrical Connection

5.1 Safety Instructions

⚠ DANGER

The PV string will generate lethal high voltage when exposed to sunlight.

- **Operators must wear proper personal protective equipment during electrical connections.**
- **Must ensure that cables are voltage-free with a measuring instrument before touching DC cables.**
- **Respect all safety instructions listed in relevant documents about PV strings.**

⚠ DANGER

- **Before electrical connections, please make sure that the inverter switch and all switches connected to the inverter are set to "OFF", otherwise electric shock may occur!**
- **Ensure that the inverter is undamaged and all cables are voltage free before performing electrical work.**
- **Do not close the AC circuit breaker until the electrical connection is completed.**

⚠ WARNING

Damage to the product caused by incorrect wiring is not covered by the warranty.

- **Electrical connection must be performed by professionals.**
- **Operators must wear proper personal protective equipment during electrical connections.**
- **All cables used in the PV generation system must be firmly attached, properly insulated, and adequately dimensioned. Cables used shall comply with the requirements of local laws and regulations.**
- **The factors that affect cable selection include rated current, cable type, routing mode, ambient temperature, and maximum expected line loss.**

⚠ WARNING

- **Do not damage the ground conductor. Do not operate the product in the absence of a properly installed ground conductor. Otherwise, it may cause personal injury or product damage.**
- **Please use measuring devices with an appropriate range. Overvoltage can damage the measuring device and cause personal injury.**

NOTICE

All electrical connections must comply with local and national/regional electrical standards.

- **Cables used by the user shall comply with the requirements of local laws and regulations.**
- **Only with the permission of the national/regional grid department, the inverter can be connected to the grid.**

NOTICE

- **Install the external protective grounding cable first when performing electrical connection and remove the external protective grounding cable last when removing the inverter.**
- **Comply with the safety instructions related to PV strings and the regulations related to the utility grid.**

NOTICE

- **After being crimped, the OT terminal must wrap the wires completely, and the wires must contact the OT terminal closely.**
- **When using a heat gun, protect the device from being scorched.**
- **Before connecting a power cable (such as the AC cable, the DC cable, etc.), confirm that the label and identifier on the power cable are correct.**
- **When laying out communication cables, separate them from power cables and keep them away from strong interference sources to prevent communication interruption.**
- **All vacant terminals must be covered with waterproof covers to prevent affecting the protection performance.**
- **Ensure that AC output cables are firmly connected. Failing to do so may cause inverter malfunction or damage to its AC connectors.**
- **When the wiring is completed, seal the gap at the cable inlet and outlet holes with fireproof/waterproof materials such as fireproof mud to prevent foreign matter or moisture from entering and affecting the long-term normal operation of the inverter.**

The cable colors in figures in this manual are for reference only. Please select cables according to local cable standards.

5.2 Terminal Description

All electrical terminals are located at the side and bottom of the inverter.

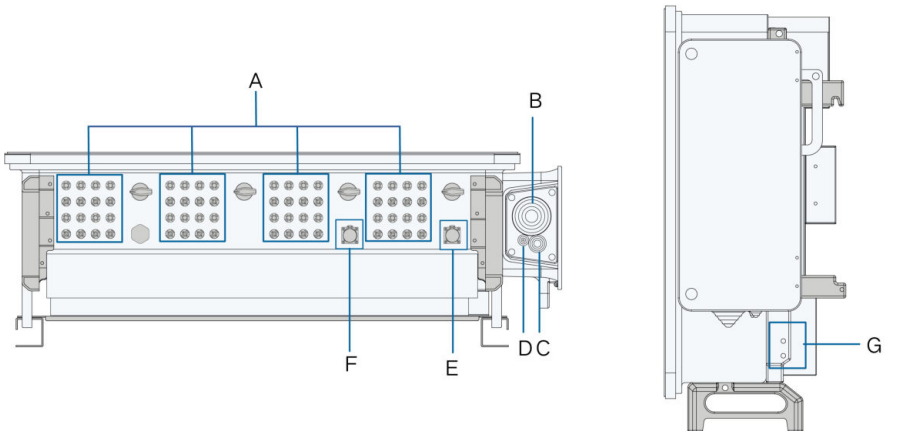

Figure 5-1 Terminal Description (One Wire per Phase with Multi-core Cable)

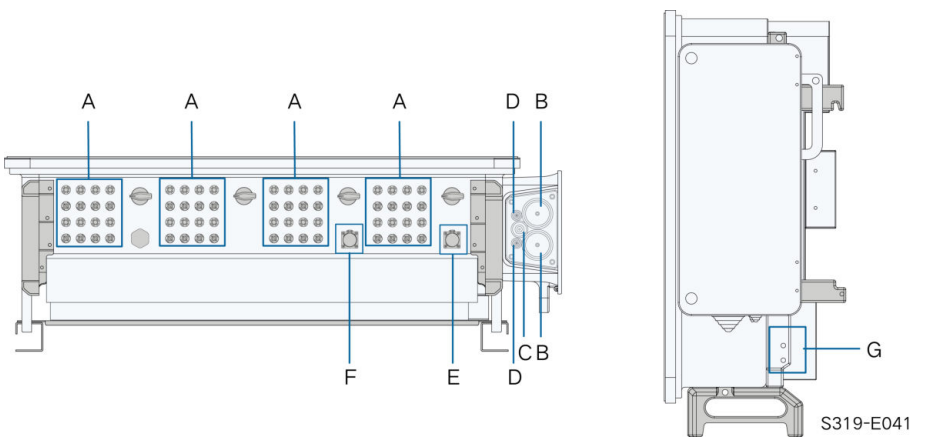

Figure 5-2 Terminal Description (Two Wires per Phase with Multi-core Cable)

* The image shown here is for reference only. The actual product received may differ.

Item	Terminal	Mark	Note
A	PV terminals	+ / -	24 / 32, PV connector The number of PV terminals varies, subject to actual product received
B	AC wiring terminal	—	Used for AC output cable connection.
C	Standby grounding terminal	—	If the PE cable is an independent single-core cable, it should be led into the AC junction box for cable wiring through the standby grounding terminal

Item	Terminal	Mark	Note
D	Tracker terminal	—	For the power cord wiring of the Tracking system
E	Communication terminal	COM1	For RS485 communication wiring.
F	Communication terminal	COM2	Optional, DI/DO and CAN wiring, etc Communication terminal COM2 is optional, subject to actual product received
G	External protective grounding terminal	⏚	For reliable grounding 2, use at least one of them to ground the inverter.

5.3 Electrical Connection Overview

Electrical connection in the PV system includes external grounding connection, AC connection, and PV string connection.

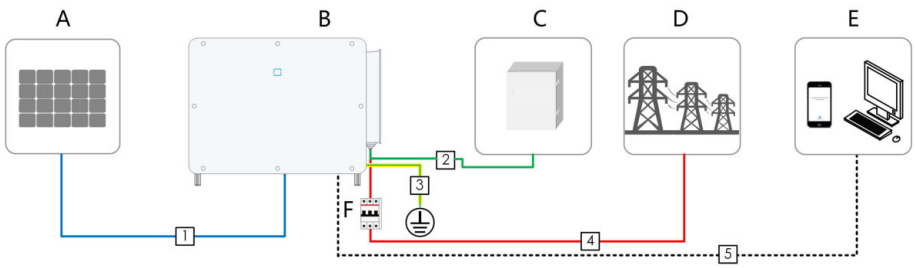

(A) PV string	(B) Inverter	(C) Tracking control box
(D) Grid	(E) Monitoring device	(F) AC circuit breaker

Table 5-1 Recommended cable specifications

No.	Cable	Type	Specification	
			Cable Diameter(mm)	Conductor Cross-sectional Area(mm^2)
1	DC cable	PV cable complying with 1,500V standard	4.7 ~ 6.4	4 ~ 6

No.	Cable	Type	Specification	
			Cable Diameter(mm)	Conductor Cross-sectional Area(mm^2)
2	Tracking system power cable	Outdoor double-core copper wire cable	8 ~ 18	0.5 ~ 10 (Recommended 4 ~ 6)
3	External grounding cable	Outdoor single-core copper wire cable	/	$S_p \geq S/2$
4	AC cable	One Wire per Phase with Multi-core Cable	Refer to Table 5-2 Recommended AC Cable specifications (One Wire per Phase with Multi-core Cable)	
		Two Wires per Phase with Multi-core Cable	Refer to 5.6.4 Two-wires-per-phase Wiring, Duplex Junction Box (with Multi-core Cable)	
5	Communication cable	Shielded twisted pair	4 ~ 11	0.75 ~ 1.5

The PE cable size is determined according to the table above or calculated in accordance with IEC 60364-5-54 and other applicable local electrical installation standards.

For the calculation in accordance with IEC 60364-5-54, the Sungrow document *TI_20261031_SG350HX-20_SG350HX_Grounding and PE cable sizing_EN_(for sizing calculation per IEC60364-5-54)* may be referenced.

Note: S is the cross-sectional area of the AC cable conductor, and Sp is the cross-sectional area of the ground cable conductor.

If single-core cables are used, whether one-wire per phase or two-wire per phase, the AC sealing plate is different. For details, please contact SUNGROW.

The AC cable sealing plate delivered with the inverter varies. The actual product received shall prevail. The sealing plate and the required AC cables are as follows.

Table 5-2 Recommended AC Cable specifications (One Wire per Phase with Multi-core Cable)

No.	Type	Specification	
		Cable Diameter(mm)	Conductor Cross-sectional Area(mm^2)
1	Outdoor four-core copper / aluminum wire cable(1)	Four-core cable: 40 ~ 75	Copper wire: S: 120 ~ 300 $S_p \geq S/2$ Aluminum wire: S: 150 ~ 400 $S_p \geq S/2$
2	Outdoor three-core copper / aluminum wire cable(1) Outdoor PE cable(2)	Three-core cable: 40 ~ 75 PE cable: 15 ~ 32	
3	Outdoor single-core copper / aluminum wire cable	18 ~ 40	

Note(1) A copper to aluminum adapter terminal is required when an aluminum cable is used. For details, refer to Aluminum Cable Requirements.

Note(2) The specifications are valid only when the phase wire and PE wire use the same material. If otherwise, ensure that the cross section of the PE wire produces a conductance equivalent to that of the wire specified in the table.

Note(3) If the outdoor-type single-core cable is used as the AC cable, please prepare a sealing plate for the single-core cable separately. Contact SUNGROW if needed.。

Table 5-3 Recommended AC Cable specifications (Two Wires per Phase with Multi-core Cable)

No.	Type	Specification	
		Cable Diameter(mm)	Conductor Cross-sectional Area(mm^2)
1	Outdoor four-core copper / aluminum wire cable(1)	Four-core cable: 47 ~ 59	Copper wire: S: 120 ~ 185 $S_p \geq S/2$ Aluminum wire: S: 120 ~ 185 $S_p \geq S/2$
2	Outdoor three-core copper / aluminum wire cable(1) Outdoor PE cable(2)	Three-core cable: 47 ~ 59 PE cable: 10~ 30	

No.	Type	Specification	
		Cable Diameter(mm)	Conductor Cross-sectional Area(mm^2)
3	Outdoor single-core copper / aluminum wire cable	18 ~ 30	Copper wire: S: 95 ~ 185 $S_p \geq S/2$ Aluminum wire: S: 95 ~ 185 $S_p \geq S/2$

Note(1) A copper to aluminum adapter terminal is required when an aluminum cable is used. For details, refer to Aluminum Cable Requirements。

Note(2) The specifications are valid only when the phase wire and PE wire use the same material. If otherwise, ensure that the cross section of the PE wire produces a conductance equivalent to that of the wire specified in the table.

If the SUNGROW MVS is used, please refer to the cable requirements specified in the MVS user manual first.

5.4 Crimp OT/DT terminal

Crimp OT/DT terminal

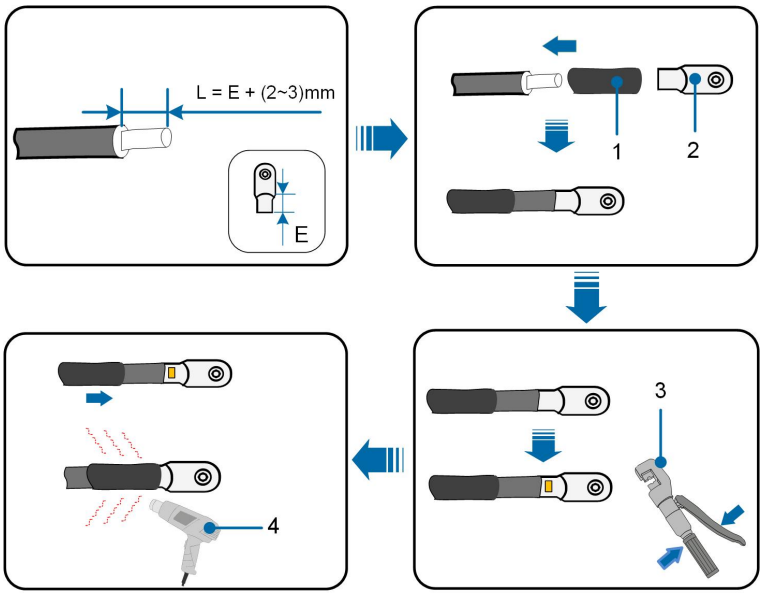

1. Heat shrink tubing
2. OT/DT terminal

3. Hydraulic pliers 4. Heat gun

Aluminum Cable Requirements

If an Aluminum cable is selected, use a copper to Aluminum adapter terminal to avoid direct contact between the copper bar and the Aluminum cable.

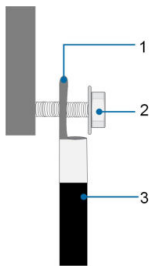

Figure 5-3 Aluminum Cable Connection

1. Copper to Aluminum adapter terminal 2. Flange nut 3. Aluminum cable

NOTICE

Ensure that the selected terminal can directly contact with the copper bar. If there are any problems, contact the terminal manufacturer.
Ensure that the copper bar is not in direct contact with the aluminum wire. Otherwise, electrochemical corrosion may occur, impairing the reliability of electrical connection.

5.5 External Protective Grounding Connection

DANGER

Electric shock!

- **Make sure that the grounding cable is connected reliably. Otherwise, it may cause electric shock.**

⚠ WARNING

- **Since the inverter is not equipped with a transformer, neither the negative electrode nor the positive electrode of the PV string can be grounded. Otherwise, the inverter will not operate normally.**
- **Connect the grounding terminal to the external protective grounding point before AC cable connection, PV string connection, and communication cable connection.**
- **The external protective grounding point provides a reliable ground connection. Do not use an improper grounding conductor for grounding, Otherwise, it may cause product damage or personal injury.**
- **Depending on Local Rules, please also ground the PV panel subconstruction to the same common grounding point (PE Bar) in addition to local lightning protection rules.**

⚠ WARNING

It is suggested that the external protective grounding terminal and the AC side grounding terminal are both connected to ground. Other grounding schemes, which meet the local standards and safety regulations, may also be adopted. However, SUNGROW shall not be held liable for any consequence caused thereby.

5.5.1 External Protective Grounding Requirements

All non-current carrying metal parts and device enclosures in the PV power system should be grounded, for example, brackets of PV modules and inverter enclosure.

When there is only one inverter in the PV system, connect the external protective grounding cable to a nearby grounding point.

When there are multiple inverters in the PV system, connect the external protective grounding terminals of all inverters and the grounding points of the PV module brackets to ensure equipotential connections to ground cables (according to the onsite conditions).

5.5.2 Connection Procedure

Step 1 Prepare the cable and OT/DT terminal, refer to Crimp OT/DT terminal.

Step 2 Remove the screw on the grounding terminal and fasten the cable with a screwdriver.

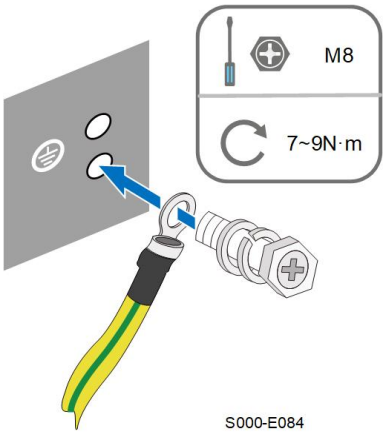

Step 3 Apply paint to the grounding terminal to ensure corrosion resistance.

The grounding screws have been anchored to the side of the inverter before delivery, and do not need to be prepared.
There are two grounding terminals. Use one of them to ground the inverter.

The inverter grounding screw's resistance to ground should be ≤4Ω. This resistance should be checked every six months.

- The metal frames of the two adjacent modules in each PV string should be connected using a reliable 4mm^2 yellow-green cable.
- The metal frames of the first and last modules in each PV string should be connected to the brackets using yellow-green cables.

--End

5.6 AC Cable Connection

5.6.1 AC Side Requirements

Only with the permission of the local grid department, the inverter can be connected to the grid.

Before connecting the inverter to the grid, ensure the grid voltage and frequency comply with requirements, for which, refer to **"Technical Data"**. Otherwise, contact the electric power company for help.

AC Circuit Breaker

⚠ WARNING

Over-current protection devices, such as AC circuit breakers and fuses, must be installed on the AC side of the inverter and the grid side to ensure safe disconnection between the inverter and the grid.

- **Do not connect any local load between the inverter and the AC circuit breaker except for the tracking axis.**
- **Multiple inverters cannot share one AC circuit breaker.**

Table 5-4 Recommended Specifications of AC Circuit Breaker

Inverter Model	Recommended Rated Voltage	Recommended Rated Current
SG285/320/333/350HX	800 V	350A / 400A

Multiple Inverters in Parallel Connection

When multiple inverters are connected to the grid in parallel, ensure that the maximum number of inverters connected in parallel to a single winding of the box-type substation is 15. Otherwise, please contact SUNGROW for technical scheme.

MV Transformer

The MV transformer used together with the inverter should meet the following requirements:

- A distribution transformer can be used if it is designed for the typical cyclical loads of a PV system (there is load in the day and no load at night).
- A liquid-immersed type transformer or a dry type transformer can be used, and the shield winding is not a requisite.
- The line-to-line voltage on the LV side of the transformer should endure the output voltage of inverter. When the transformer is connected to the IT grid, to-ground withstanding voltage of the LV winding of the transformer, the LV side AC cables, and the LV side secondary equipment (including the relay protection device, detection & measuring device, and other related auxiliary devices) should not be lower than 906 V.
- The line-to-line voltage on the HV side of the transformer should comply with the local power grid voltage.
- A transformer with a tap changer on the HV side is recommended in order to keep the voltage consistent with the grid voltage.
- At an ambient temperature of 30℃, the transformer can run in 1.1 times of load for a long time.
- The DC component that the transformer can withstand is 1% of the fundamental current at rated power.
- For thermal rating, the load curve of the transformer and environment conditions should be taken into account.

- The apparent power of the inverter should never exceed the power of the transformer. The maximum AC current of all inverters connected in parallel must be taken into account. If more than 15 inverters are connected to the grid, contact SUNGROW.
- The transformer must be protected against overloading and short circuit.
- The transformer is an important part of grid-connected PV generation system. The fault tolerance capacity of the transformer should be taken into account at all times. The fault include: system short circuit, grounding fault, voltage drop, etc.
- Take ambient temperature, relative humidity, altitude, air quality, and other environmental conditions into account when selecting and installing the transformer.
- The overall technical requirements of the box-type LV cabinet are as follows:
  - The temperature and altitude derating should be taken into account when a circuit breaker is working, and a LV cabinet temperature rise test report is required.
  - When designing a LV cabinet, must pay attention to the impact of the diffused MCCB electric arc on the cabinet and other branch circuit MCCBs, thus the interior of the cabinet needs to be insulated. A third-party test report of the circuit-breaking performance of the whole machine in an event of a short-circuit on the LV side is also required. It is recommended to adopt graduated protection to ensure that in an event of a single short-circuit fault on the LV side of the box, the corresponding branch MCCB trips normally while the general ACB does not trip.
  - When PLC communication is adopted, the LV cabinet of the MV station must be equipped with a reserved knife fuse or circuit breaker. It is recommended to use fuses or circuit breakers with a rated voltage of 1000V and a rated current no less than 2A. For the PLC cables from the EMU200A to the LV cabinet of the MV station, cables with a voltage rating of 1.8/3kV and a current-carrying capacity of 2.5-4mm² is recommended. The cable can be laid in parallel in the cable trench and shall not be knotted or twisted during installation. There is no spacing requirement between AC cables in the same trench. The PLC cable distance from the EMU200A to the busbar of the busbar of the LV cabinet of the MV station shall not exceed 10m.
- When Anti-PID is enabled, the AC output common mode voltage of the inverter is 906V, and the following requirements should be met:
  - The LV side winding of the transformer, AC cables, and secondary devices (including protective relay, detection and measurement instruments, and related auxiliary devices) must withstand the voltage to ground of at least 906 V.
  - If the LV side winding is in Y shape, neutral point grounding is prohibited.
  - Surge protective devices (SPD) for the AC combiner box and on the LV side of the transformer are recommended to be connected in the "3+1" manner, as shown in the figure below. The Min. continuous operating voltages of M1 - M4 are 680 Vac.

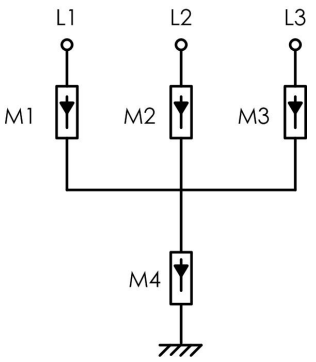

- The string serial communication box EMU200A requires an external power supply of 220 Vac, so a power supply port and an input port (including switches) should be reserved in the LV power distribution room of the boost transformer.

5.6.2 Requirements for OT/DT Terminal

OT/DT terminals (not included in the delivery scope) are required for fixing AC cables to the terminal block. Purchase the OT/DT terminals according to the following requirements.

OT/DT Terminals of Phase Wire (One Wire per Phase with Multi-core Cable)

- Specification: M12

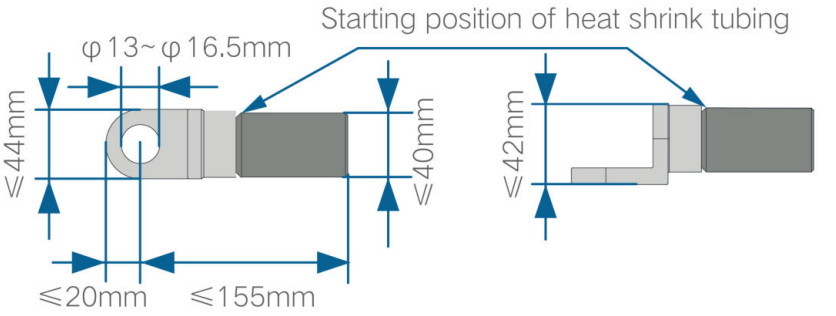

S325-E032

OT/DT Terminals of Phase Wire (Two Wires per Phase with Multi-core Cable)

- Specification: M12

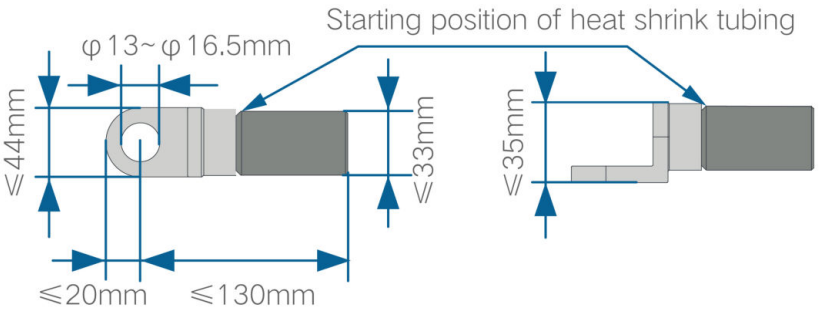

S325-E033

Requirements for Flat Washer

If the OT terminal's hole diameter is between 16.5mm and 21mm, add a flat washer made of 316/304 stainless steel between the OT terminal and the M12 nut. The size of the flat washer and the connection method are provided below.

Size of Flat Washer

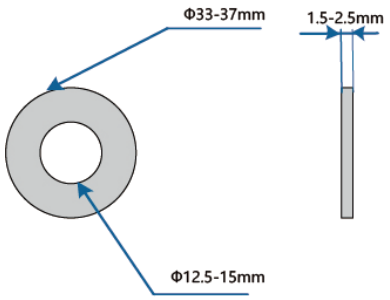

Figure 5-4 Size of Flat Washer

Installation of Flat Washer

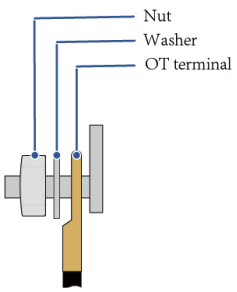

Figure 5-5 Installation of Flat Washer

OT/DT Terminal of PE Wire

- Specification: M12

5.6.3 One-wire-per-phase Wiring (with Multi-core Cable)

This section introduces the connection steps with four-core cable as an example, and the wiring method for three-core cable is the same.

Step 1 Open the AC-side circuit breaker and prevent it from closing inadvertently.

Step 2 Loosen the two screws on the front cover of the junction box with the hexagon socket wrench provided. Open the junction box. During the wiring process, the limit rod attached to the cover keeps the junction box open.

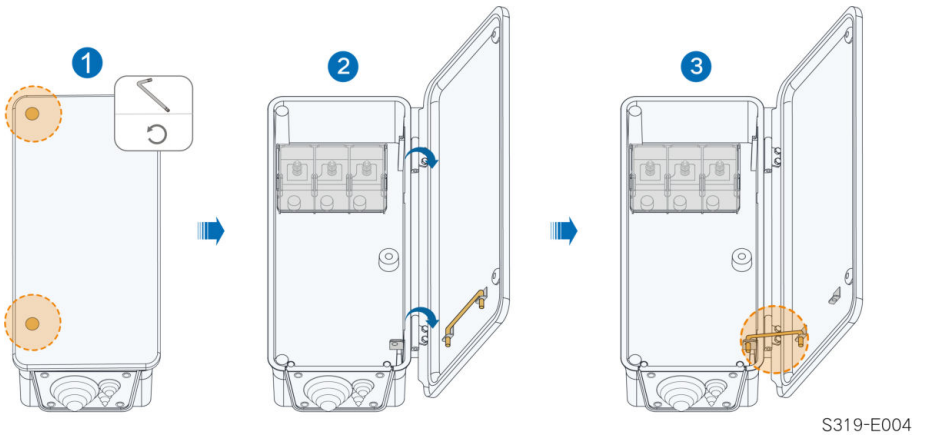

The screws on the front cover of the junction box are captive screws, which will remain on the front cover when the cover is open to avoid screw loss.

Step 3 Loosen the screws on the bottom sealing plate with the hexagon socket wrench provided and remove the bottom sealing plate.

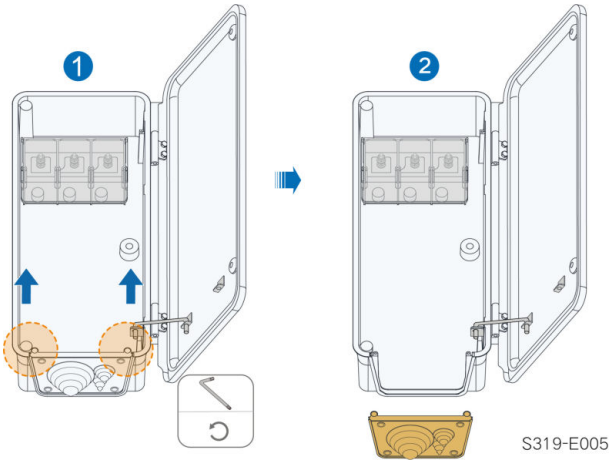

The screws on the sealing plate are captive screws, which will remain on the sealing plate when the sealing plate is removed to avoid screw loss.

Step 4 Trim the seal properly according to the outer diameter of the cable, to create an opening.

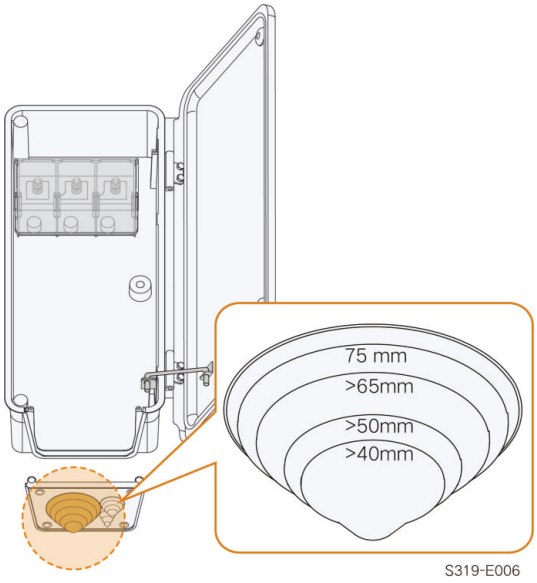

Step 5 Open the protection cover.

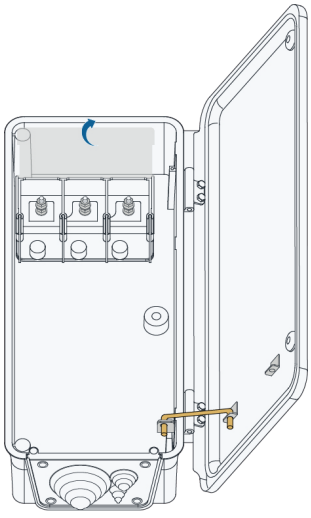

Step 6 Strip the external protective layer of the AC cables inside the junction box. Ensure that the stripping length from the bottom sealing plate is between 50 mm and 170 mm, without being stripped.

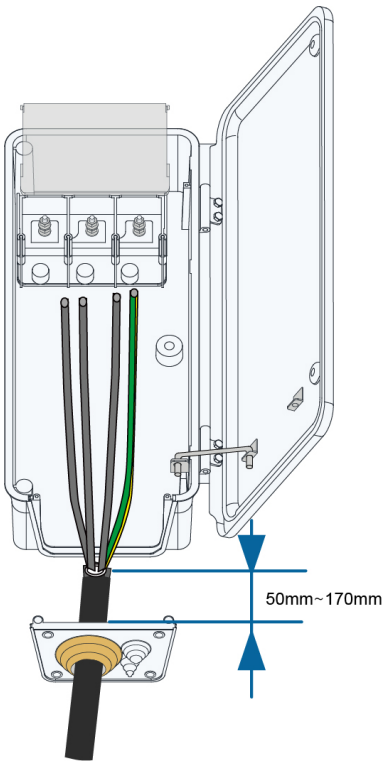

Step 7 Hang the OT terminals on the corresponding wiring terminals in the junction box.

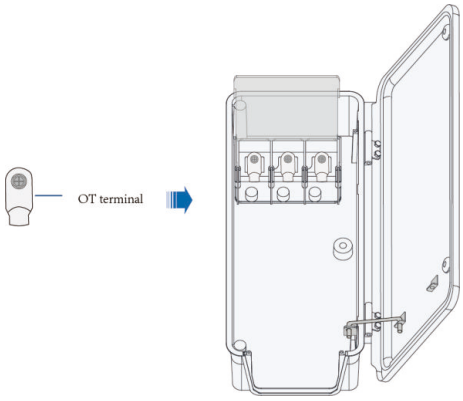

Step 8 Pass the AC cable through the bottom sealing plate, and put the AC cable and bottom sealing plate into the junction box. For ease of OT/DT terminal crimping, make sure the cable inside the junction box is long enough.

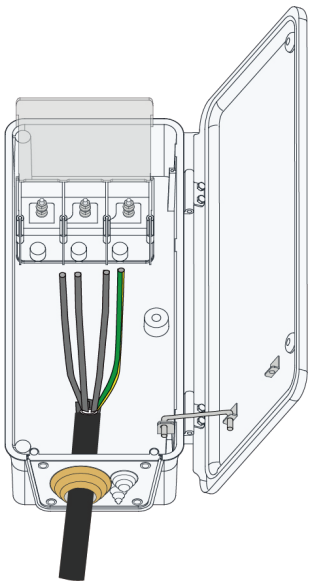

Step 9 Smooth the cut edge of the cable. Next, wrap it with insulating tape, and then fit the three-branch breakout boot and cold-/heat-shrink tubing. After that, fasten the screws on the bottom sealing plate. The three-branch breakout boot and cold-/heat-shrink tubing should be prepared by users separately and their specifications should match the requirements of the cable used.

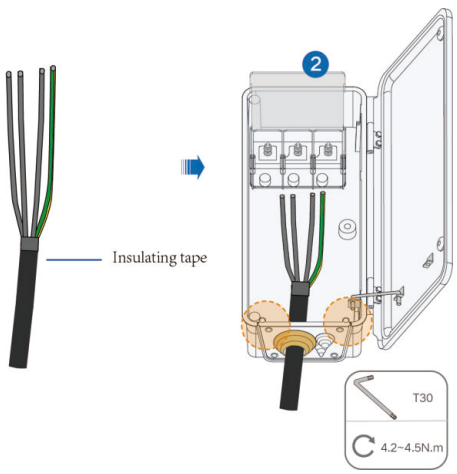

Step 10 Crimp the OT/DT terminals onto the wires. Then, secure the wires to the corresponding terminals, at a torque of 43–47N·m, as specified on the label inside the AC junction box. Securing terminals at a torque smaller or greater than the specified value may lead to poor connection.

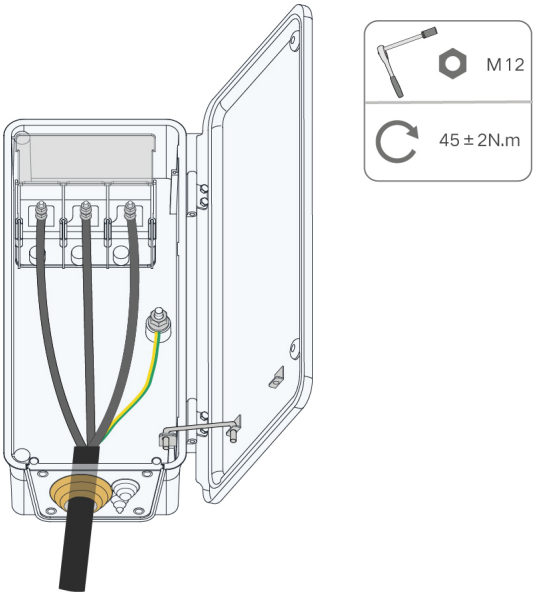
M12
45 ± 2N.m

- Ensure that the inner depth L of the socket used is not less than 28mm.

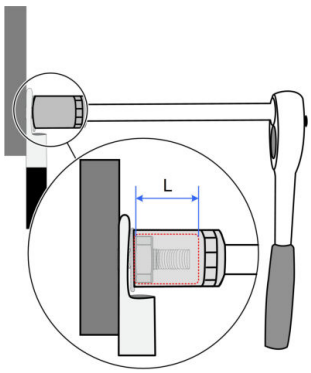

- When securing the wires to the corresponding terminals, make sure the wires do not lean forward, backward, leftward, or rightward.

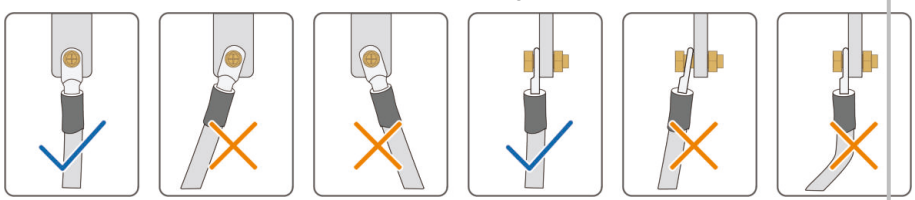

- Do not cross the wires.

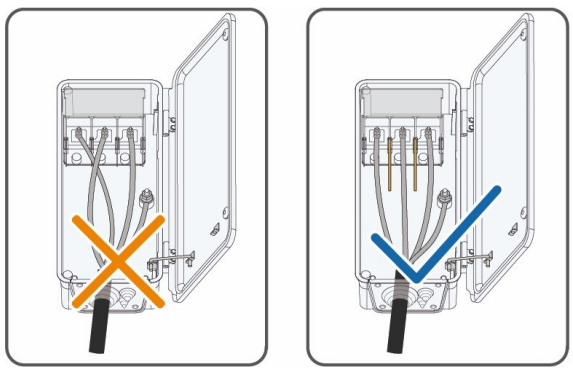

Step 11 Close the protection cover.

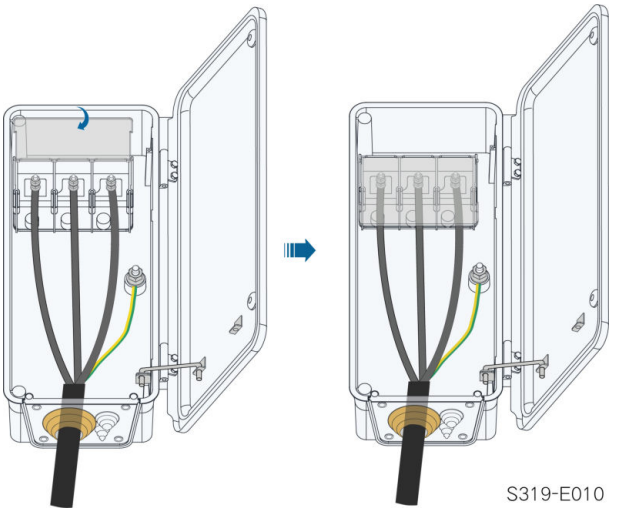

Step 12 Remove the limit rod and place it in place. Close the junction box and tighten the two screws on its front cover with the hexagon socket wrench provided.

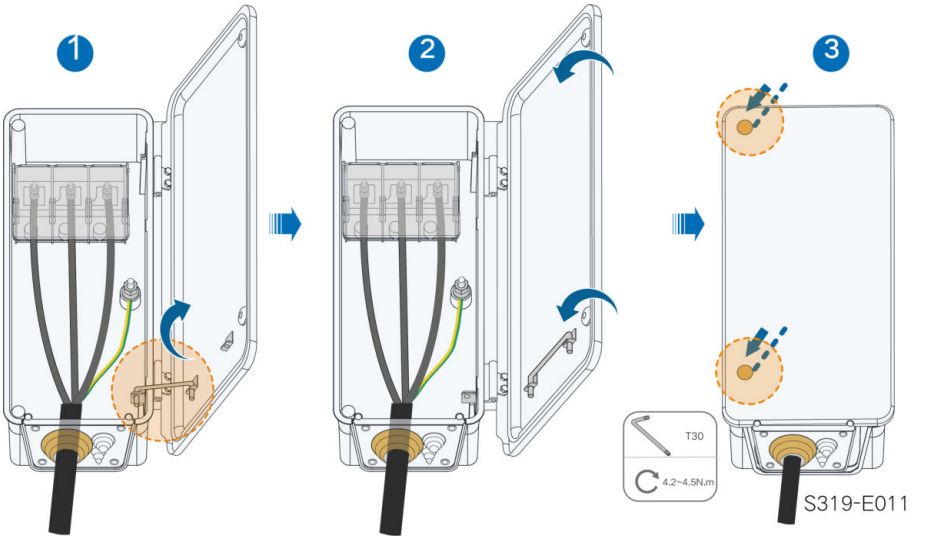

--End

When a separate single-core cable is used as the PE cable, lead it into the junction box through the standby grounding terminal.

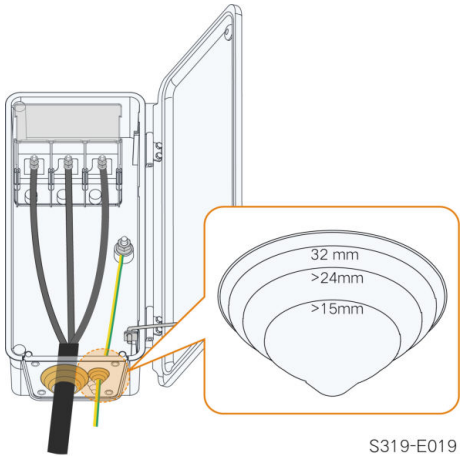

5.6.4 Two-wires-per-phase Wiring, Duplex Junction Box (with Multi-core Cable)

Prerequisite

Only some of the inverters support the two-wire-per-phase connection. Please contact SUNGROW if you have any questions.

Step 1 Open the AC-side circuit breaker and prevent it from closing inadvertently.

Step 2 Loosen the two screws on the front cover of the junction box with the hexagon socket wrench provided. Open the junction box. During the wiring process, the limit rod attached to the cover keeps the junction box open.

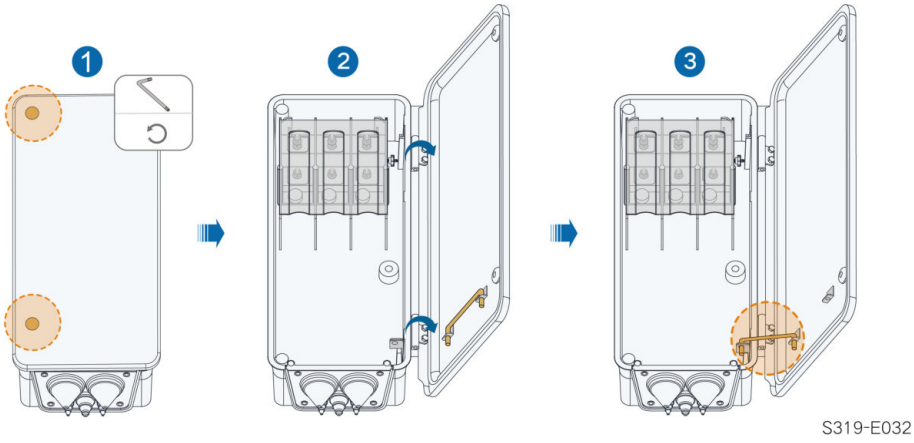

The screws on the front cover of the junction box are captive screws, which will remain on the front cover when the cover is open to avoid screw loss.

- If the two-wire-each-phase connection is adopted for a duplex-junction-box inverter, please make sure the wires of the two cables are connected respectively to the corresponding phase using terminals in the same column.
- If the two-wire-each-phase connection is adopted for a duplex-junction-box inverter: Connect wires to terminals in the bottom row first, and then to those in the upper row.
- If the one-wire-per-phase connection is adopted for a duplex-junction-box inverter, please make sure the wires of the cable are connected to terminals in the same row without crossing.

Step 3 Loosen the screws on the bottom sealing plate with the hexagon socket wrench provided and remove the bottom sealing plate.

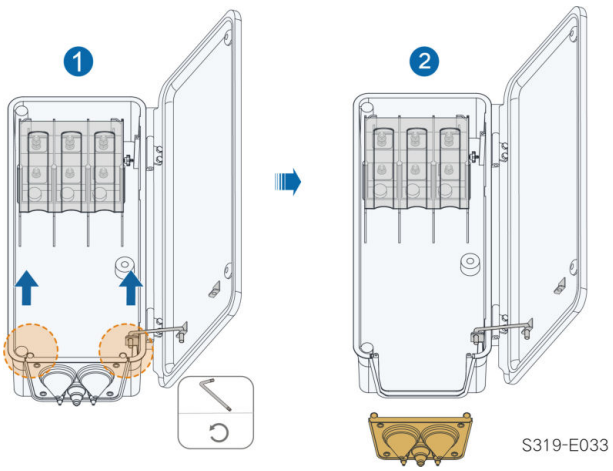

The screws on the sealing plate are captive screws, which will remain on the sealing plate when the sealing plate is removed to avoid screw loss.

Step 4 Peel off the tear-off tab on the sealing plate.

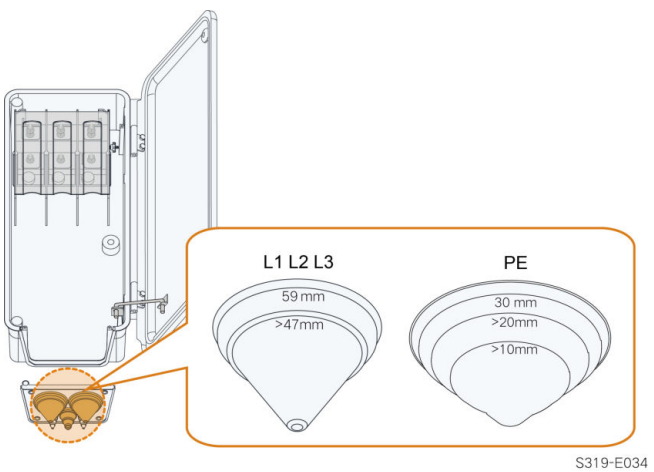

Step 5 Open the protection cover.

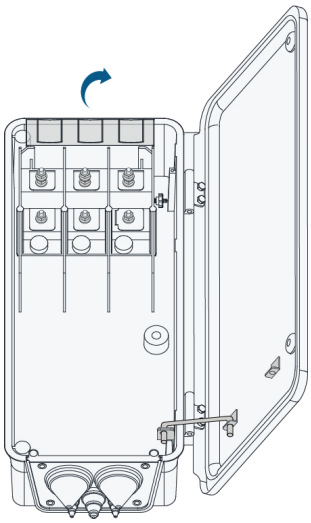

Step 6 Strip the external protective layer of the AC cables inside the junction box. Ensure that the stripping length from the bottom sealing plate is between 50 mm and 170 mm, without being stripped.

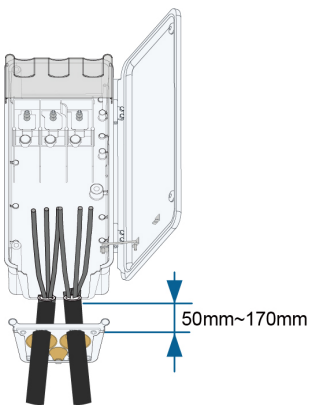

Step 7 Hang the OT terminals on the corresponding wiring terminals in the junction box.

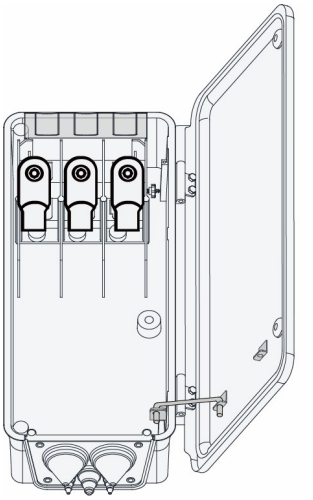

Ensure that the inner depth L of the socket used is not less than 28 mm.

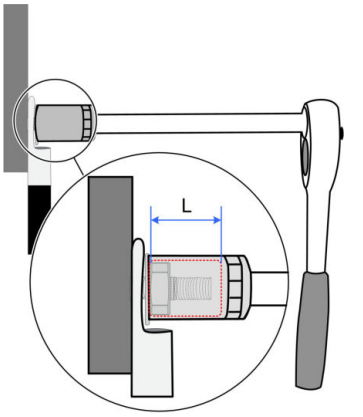

Step 8 Pass the AC cable through the bottom sealing plate, and put the AC cable and bottom sealing plate into the junction box. For ease of OT/DT terminal crimping, make sure the cable inside the junction box is long enough.

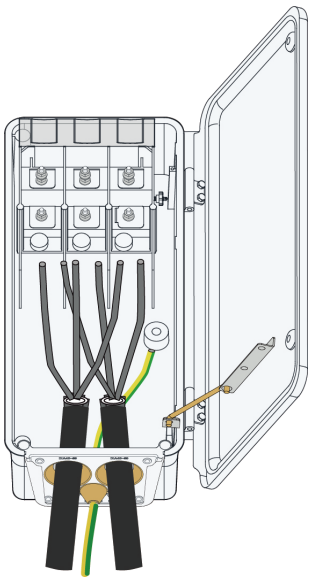

When using a multi-core cable, it is suggested that the strip length of L2 wire be 15mm shorter than that of the L1 and L3 wires.

Step 9 Smooth the cut edge of the cable. Next, wrap it with insulating tape, and then fit the three-branch breakout boot and cold-/heat-shrink tubing. After that, fasten the screws on the bottom sealing plate. The three-branch breakout boot and cold-/heat-shrink tubing should be prepared by users separately and their specifications should match the requirements of the cable used.

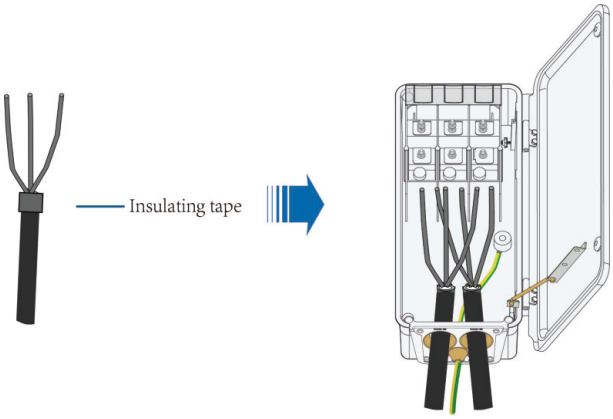

Step 10 Crimp the OT/DT terminals onto the wires. Then, secure the wires to the corresponding terminals, at a torque of 43–47N·m, as specified on the label inside the AC junction box. Securing terminals at a torque smaller or greater than the specified value may lead to poor connection. When wiring, make sure wires are connected to the terminals in the lower row first, and then to those in the upper row.

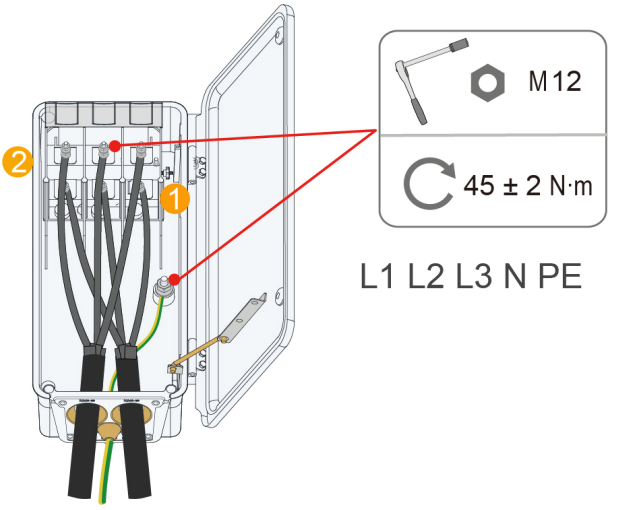
M12
45 ± 2 N·m
L1 L2 L3 N PE
2
1

- Ensure that the inner depth L of the socket used is not less than 28mm.

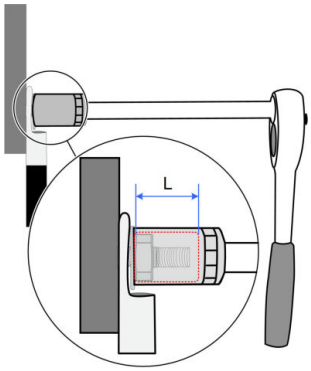

- When securing the wires to the corresponding terminals, make sure the wires do not lean forward, backward, leftward, or rightward.

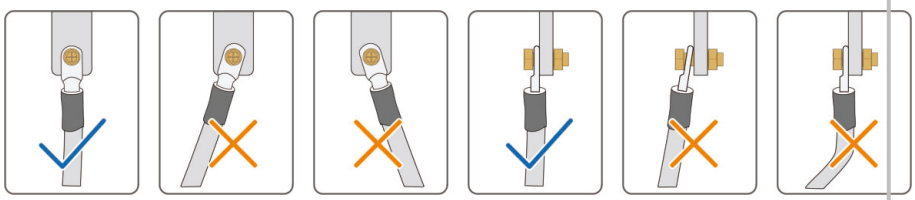

- Do not cross the wires.

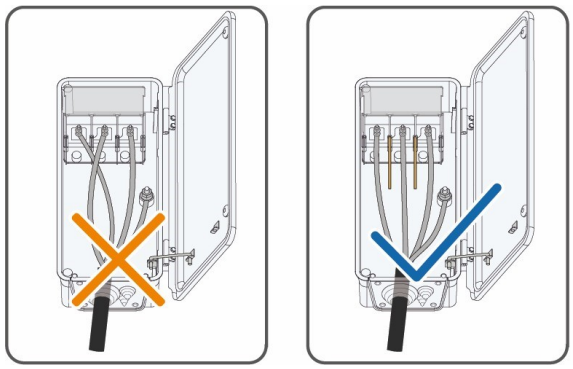

Step 11 Close the protection cover.

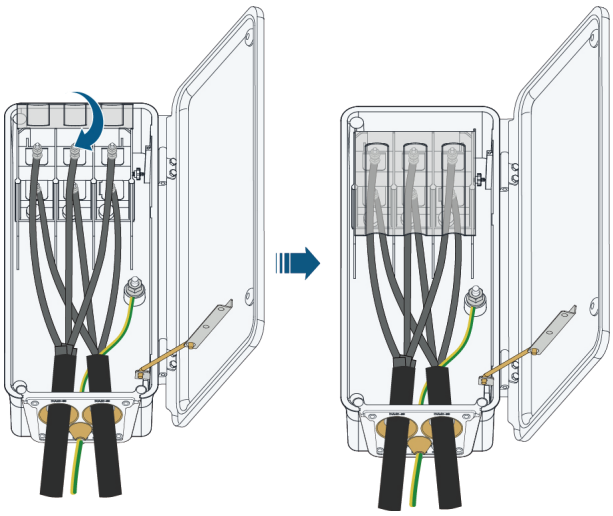

Step 12 Remove the limit rod and place it in place. Close the junction box and tighten the two screws on its front cover with the hexagon socket wrench provided.

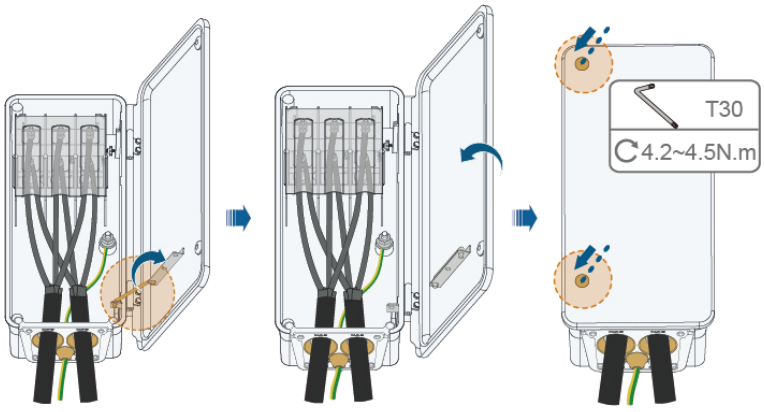

--End

5.7 DC Cable Connection

DANGER

The PV string will generate lethal high voltage when exposed to sunlight.

- **Respect all safety instructions listed in relevant documents about PV strings.**

⚠ WARNING

- **Make sure the PV array is well insulated to ground before connecting it to the inverter.**
- **Make sure the maximum DC voltage and the maximum short circuit current of any string never exceed inverter permitted values specified in "Technical Data".**
- **Check the positive and negative polarity of the PV strings, and connect the PV connectors to corresponding terminals only after ensuring polarity correctness.**
- **During the installation and operation of the inverter, please ensure that the positive or negative electrodes of PV strings do not short-circuit to the ground. Otherwise, an AC or DC short-circuit may occur, resulting in equipment damage. The damage caused by this is not covered by the warranty.**
- **Electric arc or contactor over-temperature may occur if the DC connectors are not firmly in place, and the loss caused is not covered by the warranty.**
- **If the DC input cables are reversely connected or the positive and negative terminals of different MPPT are shorted to ground at the same time, while the DC switch is in the "ON" position, do not operate immediately. Otherwise, the inverter may be damaged. Please turn the DC switch to "OFF" and remove the DC connector to adjust the polarity of the strings when the string current is lower than 0.5 A.**
- **Use the DC connectors supplied with the product for DC cable connection. Using incompatible DC connectors may result in serious consequences, and the device damage is not covered under warranty.**
- **Inverters do not support full parallel connection of strings (Full parallel connection refers to a connection method in that strings are connected in parallel and then connected to the inverter separately).**
- **Do not connect one PV string to multiple inverters. Otherwise, the inverters may be damaged.**
- **If AC wiring is to be performed when the inverter is connected to the grid, ensure the DC switches are set to "OFF" to guarantee the construction safety.**

NOTICE

The following requirements about PV string connection must be met. Otherwise, it may cause irreversible damage to the inverter, which is not covered by the warranty.

- **Mixed use of PV modules of different brands or models in one MPPT circuit, or PV modules of different orientation or inclination in a string may not damage inverter, but will cause system bad performance!**

NOTICE

Note the following items when laying cables on site:

- **The axial tension exerted by DC cables on DC PV connectors must not exceed 80 N. Avoid prolonged axial stress on the connectors.**
- **Radial stress or torque on the connectors is prohibited, as this may lead to waterproofing failure and reduced reliability of the connectors.**
- **Route DC cables through the cable tray, and leave at least 150 mm of slack near the inverter. This restricts cable movement, thereby avoiding poor contact, damage, and fracture caused by stress on terminals.**

5.7.1 PV Input Configuration

- As shown in the figure below, the inverter is provided with multiple PV inputs, each PV input is designed with an MPP tracker.
- Each PV input operates independently and has its own MPPT. In this way, string structures of each PV input may differ from each other, including number of PV modules in each string, angle of tilt, and installation orientation.
- Each PV input includes two PV strings. In order to fully utilize the input power of PV panels, the PV strings of each PV input should have the same structure, including the same type, the same number, the same tilt, and the same orientation.

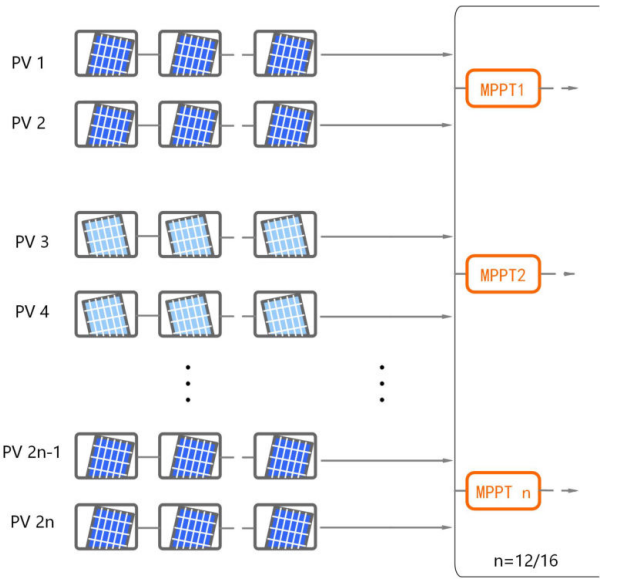

Figure 5-6 PV Input Configuratinon

Prior to connecting the inverter to PV inputs, the specifications in the following table should be met:

Open-circuit Voltage Limit	Max. Current for Input Connector
1500 V	30 A

Terminal Configuration Description

Please refer to the following requirements for DC terminal connection:

- If the number of actual PV strings is less than the number of PV strings that can be connected to the inverter, ensure that each MPPT is connected with at least one string.
- Please make sure that the connected PV strings are relatively evenly shared by the MPPTs.
- While performing connection, please give priority to the odd-numbered terminals (PV1, PV3, PV5, PV7, PV9, PV11, PV13, PV15, PV17, PV19, PV21, PV23, PV25, PV27, PV29, PV31), which are circled in red in the figure below.

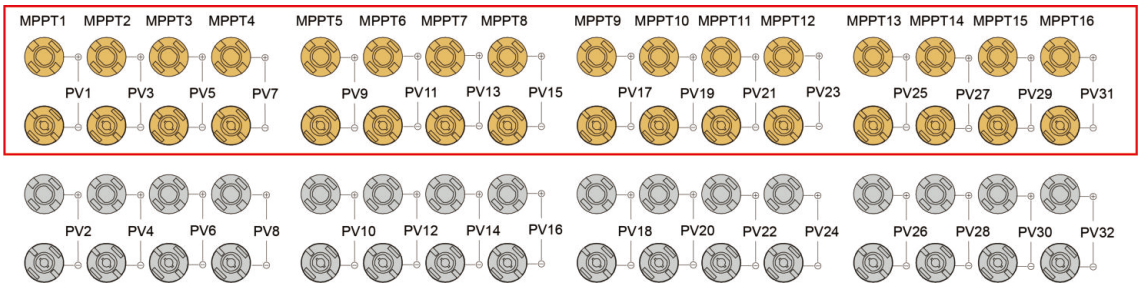

Figure 5-7 Terminal connection Description

5.7.2 Assembling PV Connectors

Prerequisite

⚠ DANGER

High voltage may be present in the inverter!

- **Ensure all cables are voltage-free before performing electrical operations.**
- **Do not connect the AC circuit breaker before finishing electrical connection.**

NOTICE

Please use the DC terminal within the scope of delivery or purchase the PV connector according to the recommended model below. Equipment damage caused by the use of unmatched terminals is not covered by the warranty.

- **If the cross-sectional area of the DC cable is 4/6mm^2, use the PV connector within the scope of delivery. The recommended model of the female cable connector is PV-KST4-EVO 2 / 6I-UR (Stäubli), and the recommended male cable connector is PV-KBT4-EVO 2 / 6I-UR (Stäubli).**
- **If the cross-sectional area of the DC cable is 10mm^2, users need to prepare the PV connector by themselves or order it from SUNGROW. The recommended model of the female cable connector is PV-KBT4-EVO 2 / 10II-UR (Stäubli), and the recommended male cable connector is PV-KST4-EVO 2 / 10II-UR (Stäubli).**

Step 1 Strip the insulation from each DC cable by 8 mm ~ 10 mm.

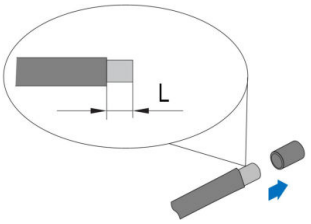

Step 2 Assemble the cable ends with the crimping pliers.

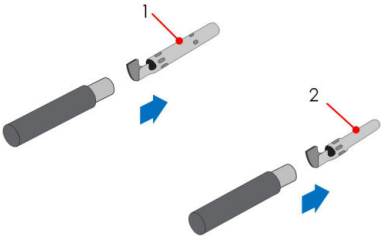

1: Positive crimp contact 2□Negative crimp contact

Step 3 Lead the cable through the cable gland, and insert the crimp contact into the insulator until it snaps into place. Gently pull the cable backward to ensure firm connection.

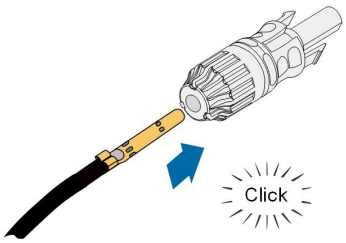

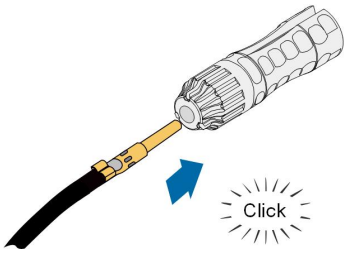

Step 4 Tighten the cable gland and the insulator.

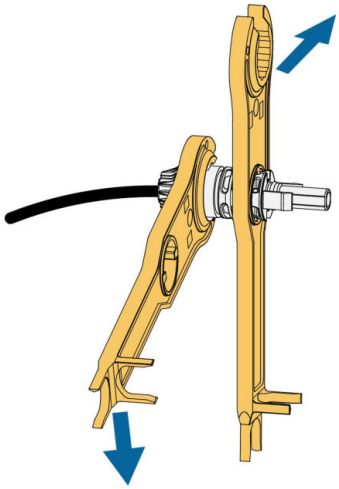

Step 5 Check for polarity correctness.

NOTICE

If the PV polarity is reversed, the inverter will be in a fault or alarm state and will not operate normally.

--End

5.7.3 Installing PV Connector

Step 1 Ensure that the DC switch is in "OFF" position. Otherwise, manually turn it to "OFF".

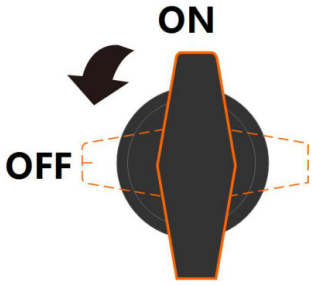

Step 2 Check the cable connection of the PV string for polarity correctness and ensure that the open circuit voltage in any case does not exceed the inverter input limit of 1500 V.

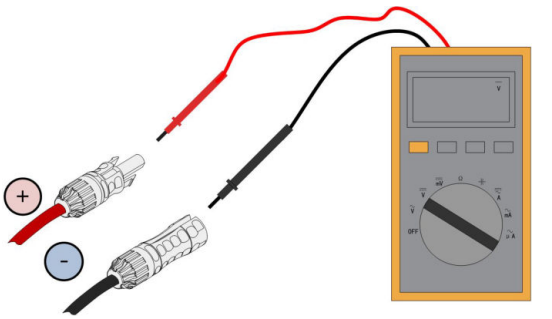

NOTICE

The multimeter must have a DC voltage range of at least 1500 V. If the voltage is a negative value, the DC input polarity is incorrect. Please correct the DC input polarity. If the voltage is greater than 1500 V, too many PV modules are configured to the same string. Please remove some PV modules.

Step 3 Connect the PV connectors to corresponding terminals until there is an audible click.

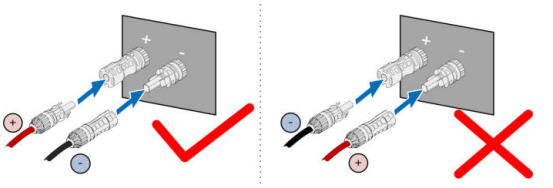

Step 4 Follow the foregoing steps to connect PV connectors of other PV strings

Step 5 Seal any unused PV terminal with a terminal cap.

NOTICE

Turn the corresponding DC switch to "ON" after the PV string is connected to the PV terminal on the inverter.

--End

NOTICE

- **After the PV string is connected to the input terminal on the inverter, please turn on the corresponding DC switch.**
- **Only when the DC switch is set to "ON", the DC Type II is able to provide effective protection against electrical surges.**

5.8 Wiring of Tracking System Power Cable

Step 1 Refer to step 1 to step 2 described in 5.6.3 One-wire-per-phase Wiring (with Multi-core Cable).

Step 2 Cut off excess sealing ring according to the outer diameter of the cable.

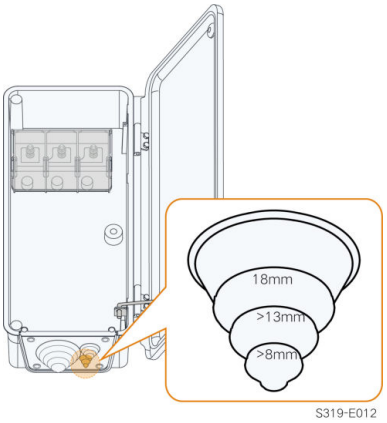

Step 3 Lead the cable with the protective layer removed through the sealing ring. Retain 50 mm of cable with the protective layer in the AC junction box.

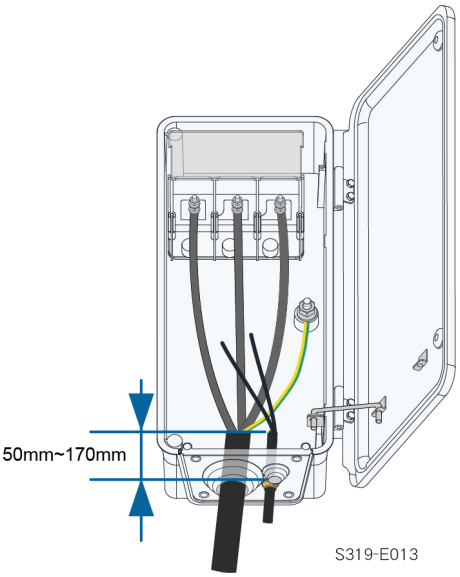

Step 4 Stack the OT terminals on the OT/DT terminals of the AC cables, and fix the cables to corresponding terminals.

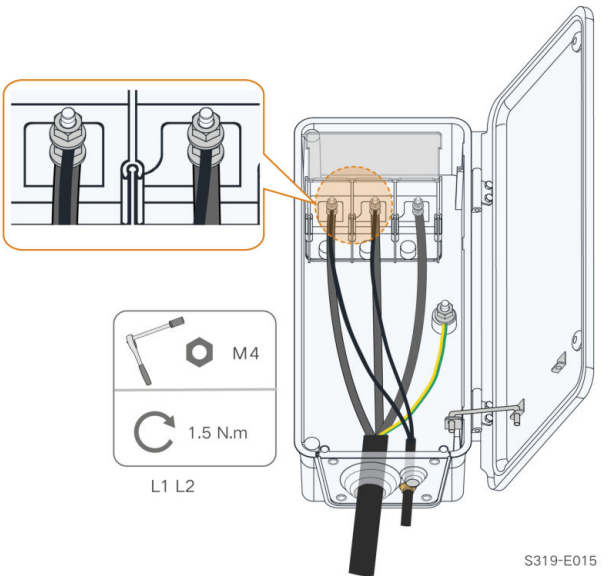

The tracking power cable can be installed in any two phases among L1/L2/L3.

Step 5 Close the protection cover. Close the junction box and tighten the two screws on its front cover with supplied Allen wrench.

--End

Protection devices required between the inverter and the tracking system control box: disconnector switch (≥ 800 Vac) + fuse (16A, gM).
Length of the cable connecting the internal wiring terminal of the inverter and the fuse should be less than 2.5 m.

5.9 RS485 Connection(COM1)

5.9.1 Interface Description

The inverter communication terminal COM1 is located at the bottom of the inverter, as shown in the figure below.

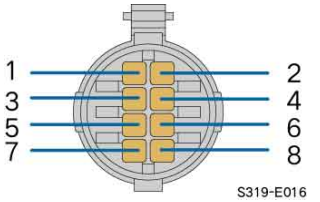

Table 5-5 COM1 Terminal Definition

Port	PIN	Definition	Description
RS485_1	1	RS485A1 , RS485 differential signal+	Used for cascading inverters or

Port	PIN	Definition	Description
	2	RS485A1 , RS485 differential signal+	connecting to devices such as the Data Logger.
	3	RS485B1 , RS485 differential signal-	
	4	RS485B1 , RS485 differential signal-	
PE	5	PE, shielding ground	—
	6	PE, shielding ground	
RS485_2	7	RS485A2, RS485 differential signal+	Used for connecting to communication devices of the tracking system.
	8	RS485B2, RS485 differential signal-	

5.9.2 RS485 Communication System

Single-inverter Communication System

In case of a single inverter, communication cable connection requires only one RS485 cable.

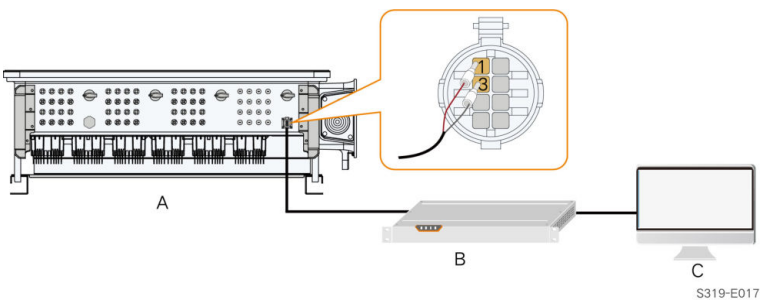

(A) Inverter (B) Data Logger (C) PC

Multi-inverter Communication System

In case of multiple inverters, all the inverters can be connected via RS485 cables in the daisy chain manner. The communication cable of the tracking system can be connected to the port RS485_2 of any inverter in the daisy chain.

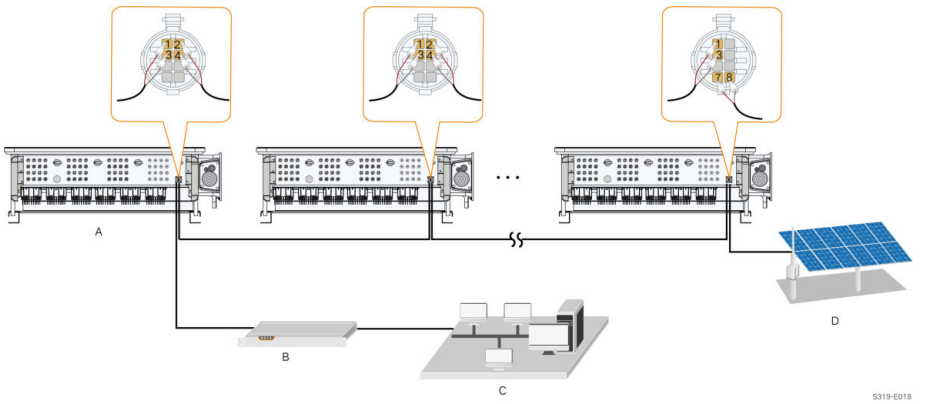

(A) Inverter (B) Data Logger (C) PC (D) Tracking system

- The length of the RS485 cable should be no longer than 1,000 m.
- If multiple inverters are connected to the data logger, the number of permissible daisy chains and the number of devices allowed to be connected should meet the requirements (refer to the user manual of the data logger).
- To ensure stable system communication and accurate data acquisition, make sure that all inverters connected to the same transformer winding access the data logger via the same RS485 channel.Inverters under different windings must not be daisy-chained to the data logger via RS485; otherwise, data acquisition may fail. Any issues arising from such improper connections are not covered by the warranty.

5.9.3 Connection Procedure

Step 1 Unscrew the swivel nut from the communication terminal and take out the seal.

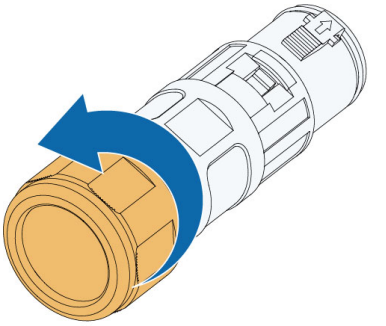

Step 2 Press the snap on both sides of the connector to separate the cable gland and the terminal block.

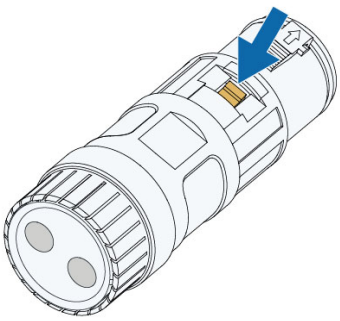

Step 3 Select a seal according to the cable outer diameter. Lead the cable through the swivel nut, seal and the cable gland.

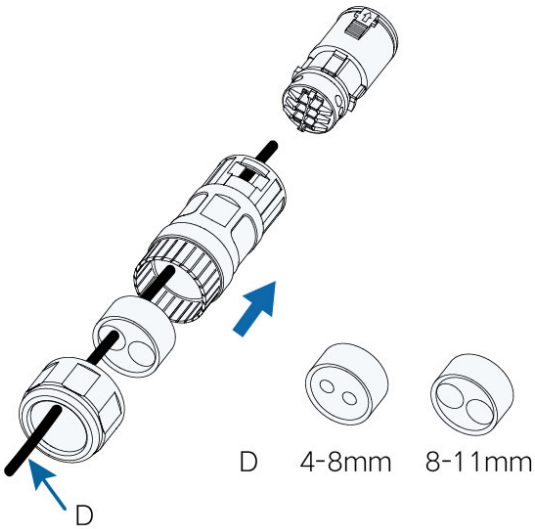

Step 4 Strip the protective layer and the insulation layer of the cable to proper length.

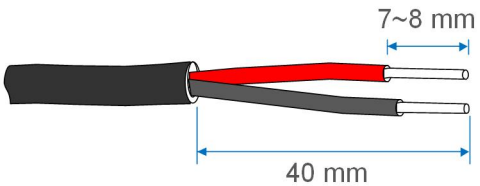

Step 5 Secure the wires to corresponding terminals.

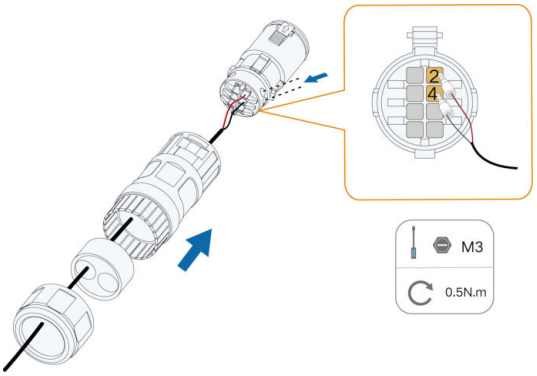

Step 6 Pull cables outwards to confirm whether they are fastened firmly, then tighten the swivel nut with appropriate torque.

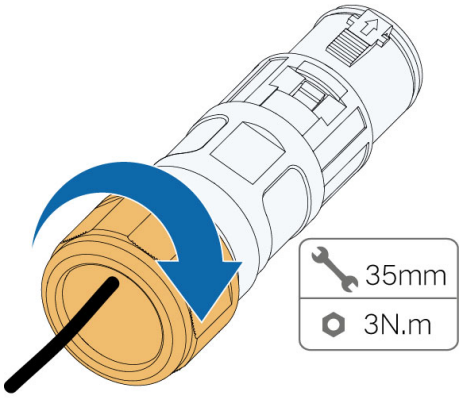

Step 7 Remove the waterproof lid from the communication terminal COM1.

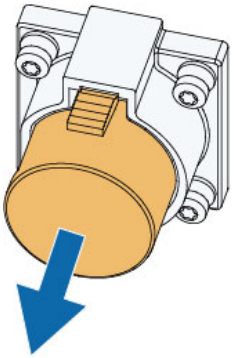

Step 8 Insert the connector into the communication terminal.

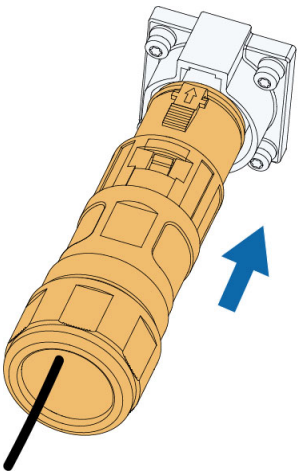

Step 9 Seal the vacant cable hole with a waterproof plug.

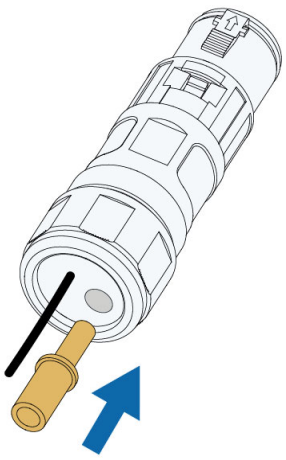

--End

5.10 PLC Communication Connection

With a PLC communication module built inside, the inverter can communicate with the Data Logger provided by SUNGROW. For specific wiring method, refer to the user manual for the data logger.

- The Data Logger is an optional device that can be ordered from SUNGROW.
- The Data Logger conducts data communication by directly using the AC output cable of the inverter and thus saves the trouble to lay and maintain the special communication cables. The RS-485 port of the Data Logger supports the transparent transmission of the MODBUS-RTU and is completely compatible with the monitoring devices and software of the original RS-485 communication method.

5.10.1 Application Scenarios

Device can be connected to a double-split transformer and a double-winding transformer. Wiring diagrams under these two scenarios are shown as follows. PLC1 refers to the MPLC node built in Logger4000. All cables run outside Logger 4000 in the wiring diagram, only for a clear illustration of the wiring principles.

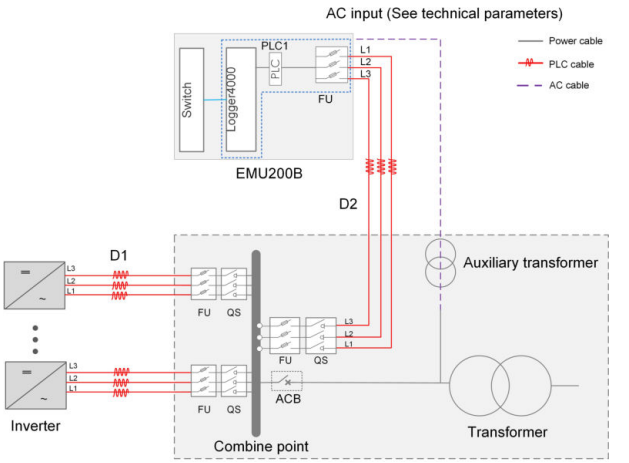

Figure 5-8 PLC wiring diagram for a double-winding transformer

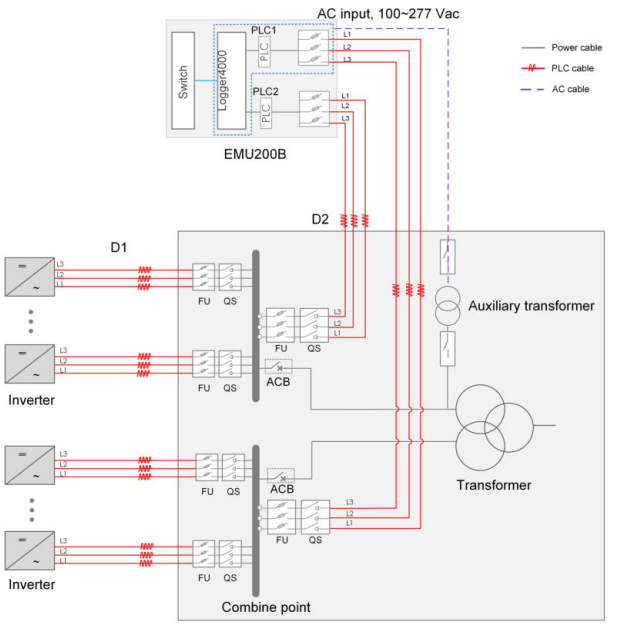

Figure 5-9 PLC wiring diagram for a double-split transformer

Description of parameters in the diagrams is listed in the table below.

Parameter	Description	Cable Specification
D1	Length of PLC cable from communication box to box-type transformer	• If using multicore AC cable, the length should be ≤990m. • If using single-core AC cable: - When D2 ≤ 3m, the single-core cable length should be ≤790m. - When 3m < D2 ≤ 10m, the single-core cable length should be ≤690m. • If the two-wire-per-phase wiring scheme is adopted, the cable length requirements are the same as above.
D2	PLC cable from box-type transformer to communication box or external PLC module	• Outdoor UV-resistant multicore copper AC cable should be used, with a recommended core diameter of 2.5mm² to 4mm². • Cable isolation voltage > 1000V. • Cable length ≤ 10m. **NOTICE** **The shorter the cable, the better the communication quality. If the cable length exceeds 10m, there is a risk of communication disconnection.**

Parameter	Description	Cable Specification
PLC module	Port input voltage	≤800 Vac
	Port supply voltage	24 Vdc
	Maximum number of inverters connected	80

5.10.2 PLC Wiring Rules

Wiring from box-type transformer to inverter

General requirements

The box-type transformer can be connected to the inverter using multi-core AC cables or single-core AC cables, or adopting the two-wire-per-phase wiring scheme, as required by the project.

To ensure communication quality, the use of multi-core cables is recommended.

- The cable should be laid in cable trenches, cable ducts, or conduits.
- The cables should be laid parallel without any knots or twists.

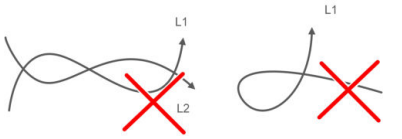

- For three-phase single-core cables, they should be fixed every 1 meter and arranged in a "triangular" shape.

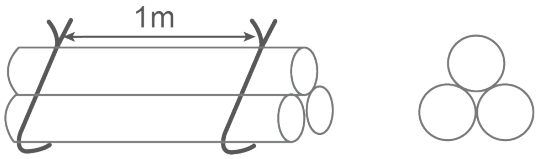

In this scenario, the cables are not easily bent. It is recommended to tie them separately at positions 10cm before and after the bend.

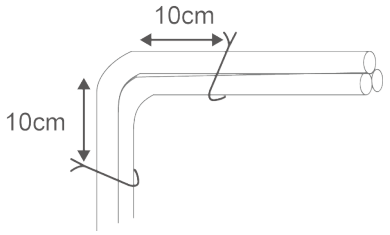

- If the single-core cables exceed 400 meters, log into the Web UI of Logger4000, on the **MPLC** page, set the PLC master node's frequency to **Band2** or **Band3**.

Requirements for two-wire-per-phase wiring

If two-wire-per-phase wiring is adopted, to ensure the MPLC communication quality, the length difference between the two sets of cables must not exceed 5 meters. For two-wire-per-phase wiring using single-core cables, the requirements for both sets of cables and the frequency band settings are the same as mentioned above.

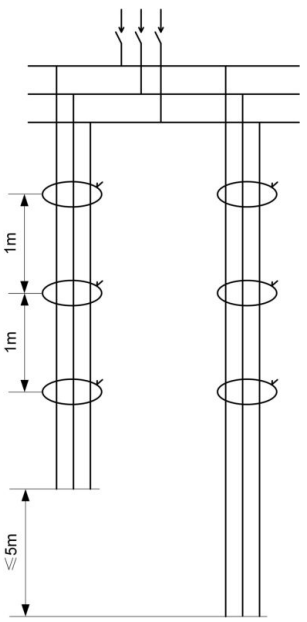

Figure 5-10 Two-wire-per-phase wiring scheme

PLC wiring requirements

- The distance between low-voltage AC cables and medium-voltage AC cables should meet the following requirements:
  - Maintain a minimum horizontal distance of 0.5m between low-voltage AC cables and medium-voltage AC cables when laid parallel.

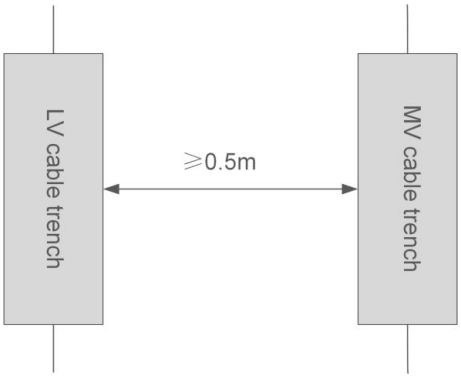

- If two cables are laid in a crossing manner, the angle of crossing should be between 60° and 120°, and the vertical distance should be no less than 0.5m.

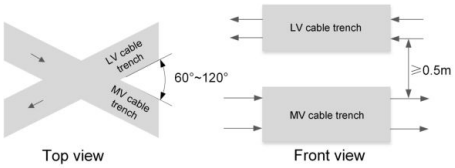

- Only AC cables under the same box-type transformer can be laid in the same cable trench.
- When using different box-type transformers, the distance between the low-voltage side cable trays should meet the following requirements:
  - Maintain a minimum horizontal distance of 0.5m between cable trays from different box-type transformers.

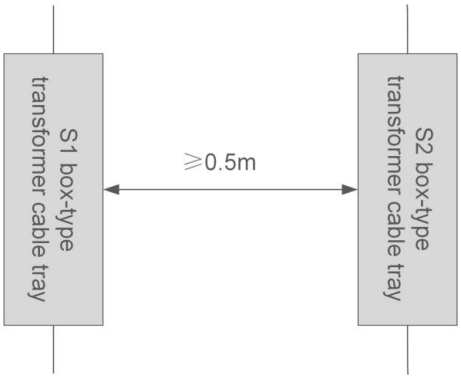

- If two cables are laid in a crossing manner, the angle of crossing should be between 60° and 120°, and the vertical distance should be no less than 0.5m.

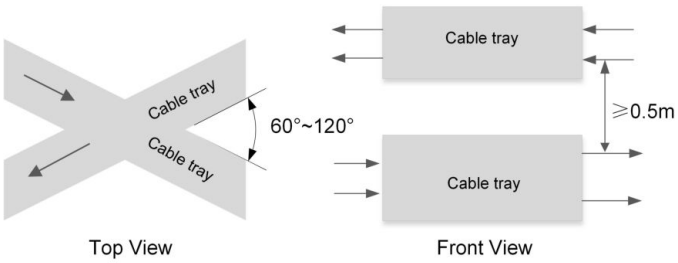

Figure 5-11 Vertical crossing distance between PLC cables

Wiring from communication box to box-type transformer

- The AC cable between the box-type transformer and the communication box should be laid parallel without being twisted within the cable trench.
- The coupling point for the PLC cable connecting to the box-type transformer busbar should ideally be at the breaker corresponding to the middle position of the busbar. For example, this would be the 4th or 5th branch in an 8-branch setup, or the 5th branch in a 9-branch setup.

5.10.3 PLC Wiring

Pre-wiring preparation

- Before performing AC wiring, please ensure that upstream AC switches and fuses inside the device are all in the open state.
- Please refer to 5.10.1 Application Scenarios for PLC application scenarios and cable specifications.
- Please refer to 5.10.2 PLC Wiring Rules for wiring diagrams under different application scenarios.

Steps of wiring

1. Unscrew the "MPLC 800V" waterproof terminal at the bottom of the device, and lead the external AC cable through the waterproof terminal.
2. Remove the protective layer of the cable using a wire stripper to expose the copper core, as shown in the figure below.

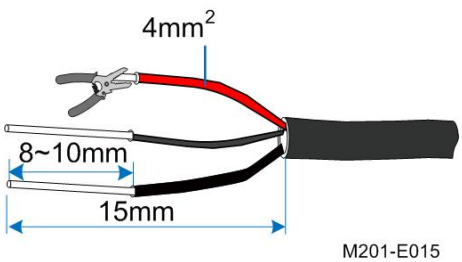

3. Crimp the OT terminals (OT2.5-6 is recommended).

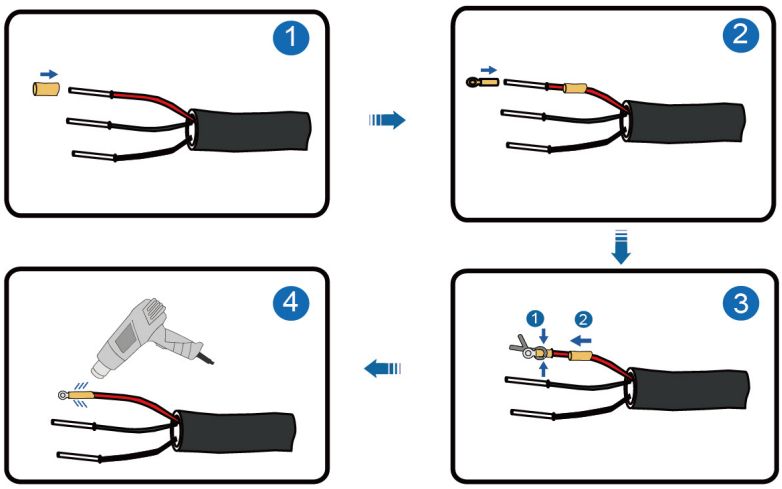

4. Connect the cable to the corresponding terminal, as shown in the figure below.

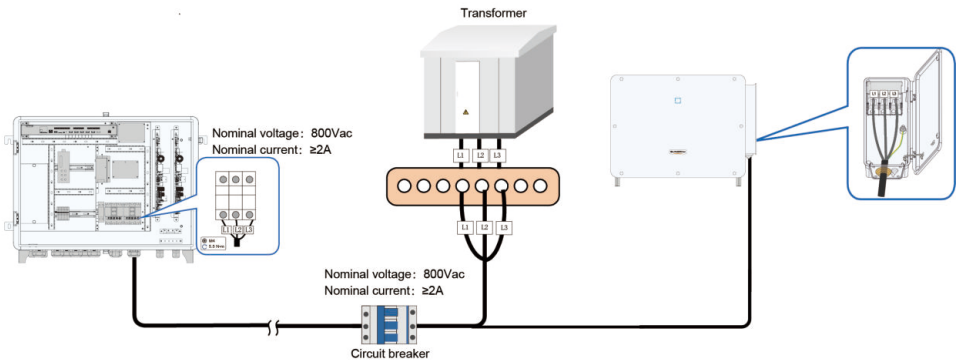

Figure 5-12 Three-phase three-wire method

The coupling point for connecting the PLC cable to the box-type transformer busbar is recommended to be arranged in the position corresponding to the middle of the busbar.

- For parameters of the circuit breaker on the box-type transformer side, you may refer to the parameters of EMU200A's internal circuit breaker in the above figure.
- Please pay attention to the phase sequence of cables and terminals in the wiring process.

5. Fasten the cables with screws after confirming the cables are properly prepared. Tightening torque: 5.5N·m

5.11 Dry Contact Connection(COM2)

Communication terminal COM2 is optional, subject to actual product received.

5.11.1 Interface Description

The inverter communication terminal COM2 is located at the bottom of the inverter, as shown in the figure below.

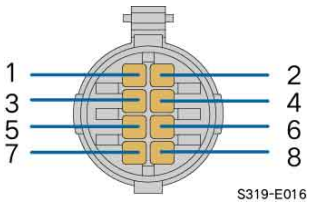

Table 5-6 COM2 Terminal Definition

Port	PIN	Definition	Description
/	1	/	
/	2	/	
DI	3	DI	Emergency stop dry contact
	4	PGND	
D0	5	COM	Fault output dry contact
	6	NC	
	7	NO	
/	8	/	

5.11.2 Dry Contact Function

DI terminal (emergency stop dry contact): the dry contact can be configured to be an emergency stop contact.

When the DI contact and PGND contact are shorted by external controlled switch (the external switch can be configured as normally open contact or normally closed contact), the inverter will immediately stop.

The dry contacts only support passive switch signal input.

The following figure shows the typical application of emergency stop dry contact.

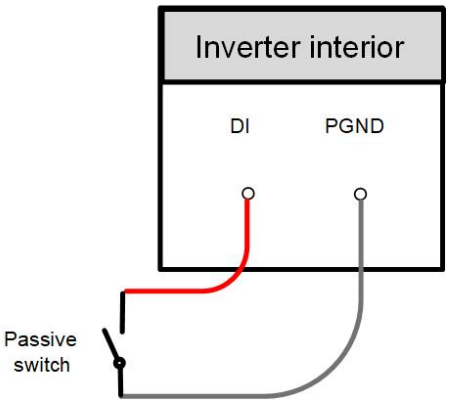

Figure 5-13 Local Stop Contact

When wiring DI dry contacts, ensure that the maximum wiring distance meet the requirements in 9.2 Wring Distance of DI Dry Contact.

DO terminal (fault output dry contact): the relay can be set to fault alarm output, and user can configure it to be a normally open contact (COM□NO) or a normally closed contact (COM□ NC).

The relay is initially at the NC contact,, and it will trip to another contact when a fault occurs. Use LED indicators or other equipment to indicate whether the inverter is in the faulty state.

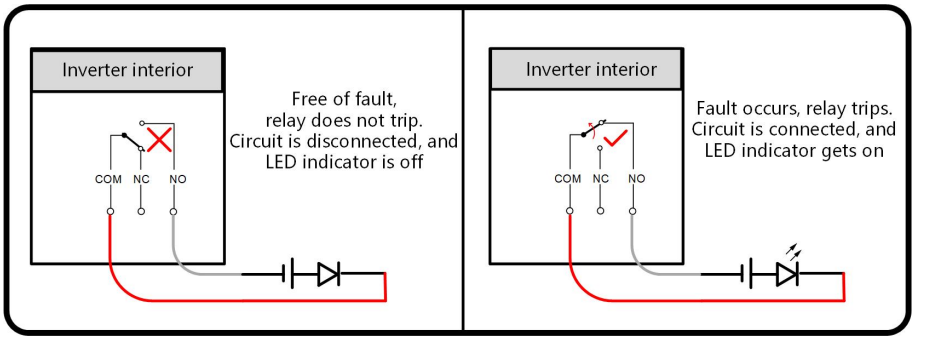

Figure 5-14 Normal open contact

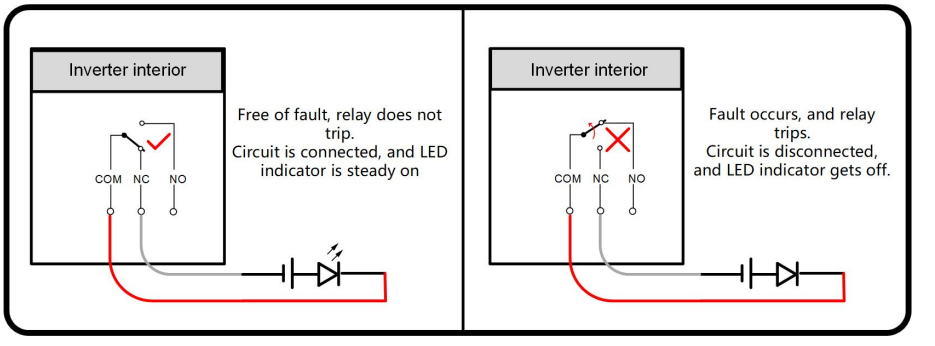

Figure 5-15 Normally Closed Contact

Devices connected to the relay should comply with related requirements:

AC-Side Requirements	DC-Side Requirements
Max. voltage: 230 Vac Max. current: 3A	Max. voltage: 30Vdc Max. current: 3A

5.11.3 Connection Procedure

Step 1 Unscrew the swivel nut from the communication terminal and take out the seal.

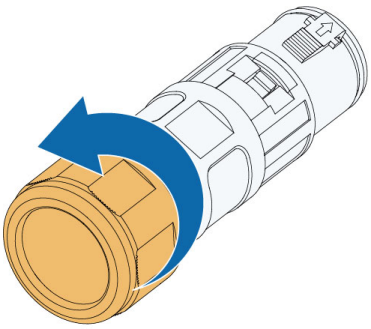

Step 2 Press the snap on both sides of the connector to separate the cable gland and the terminal block.

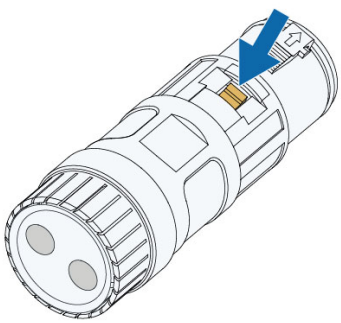

Step 3 Select a seal according to the cable outer diameter. Lead the cable through the swivel nut, seal and the cable gland.

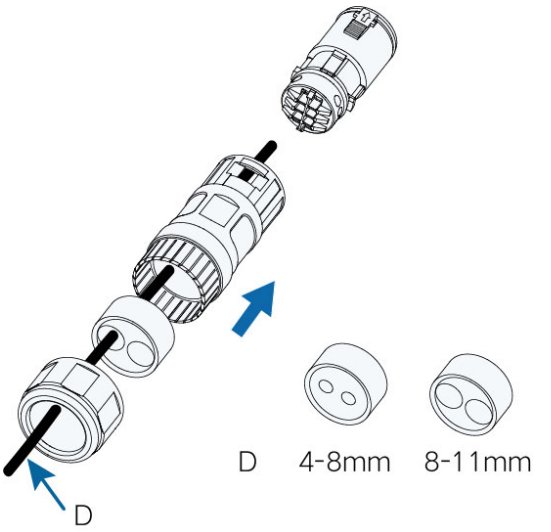

Step 4 Strip the protective layer and the insulation layer of the cable to proper length.

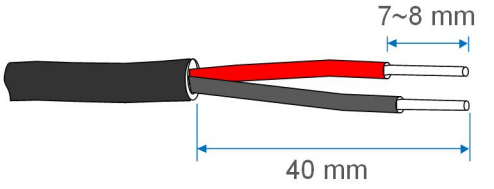

Step 5 Secure the wires to corresponding terminals.

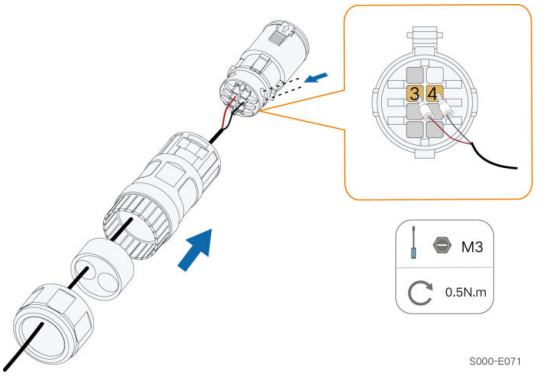

Step 6 Pull cables outwards to confirm whether they are fastened firmly, then tighten the swivel nut with appropriate torque.

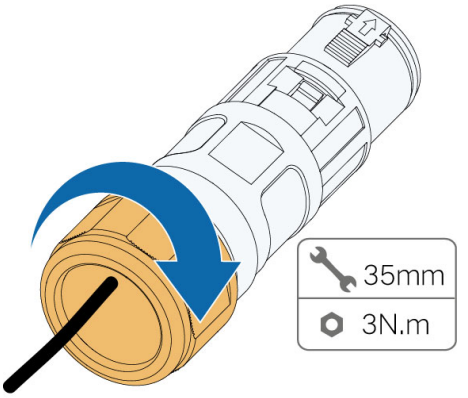

Step 7 Remove the waterproof lid from the communication terminal COM2.

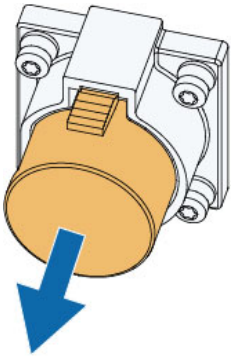

Step 8 Insert the connector into the communication terminal.

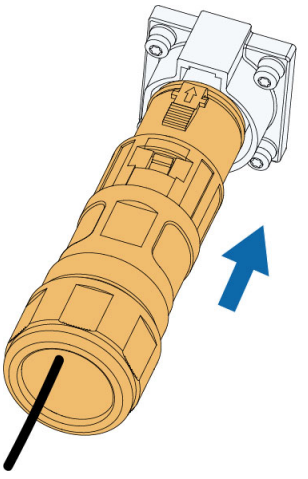

Step 9 Seal the vacant cable hole with a waterproof plug.

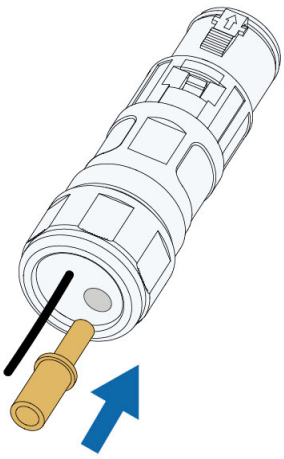

--End

6 iSolarCloud App

6.1 Brief Introduction

The iSolarCloud App can establish communication connection to the inverter via the Bluetooth, thereby achieving near-end maintenance on the inverter. Users can use the App to view basic information, alarms, and events, set parameters, or download logs, etc.

Screenshots in this manual are based on the Android system V2.1.6 , and the actual interfaces may differ.

6.2 Installing App

Method 1

Download and install the App through the following application stores:

- MyApp (Android, mainland China users)
- Google Play (Android, users other than mainland China ones)
- App Store (iOS)

Method 2

Scan the following QR code to download and install the App according to the prompt information.

The App icon appears on the home screen after installation.



6.3 Network Security Mode Overview

The App operates in two modes: network security mode and non-network security mode. Below are the permission differences between the two modes.

Network security mode

User Type	Account	Permissions
General user	user	Monitoring access and basic settings (e.g., overview, device monitoring, partial historical data).
O&M user	admin	All operations and functions described in this manual are based on the permissions of the O&M user.
Developer account	develop	If an administrator account exists, the administrator must enable O&M mode before the developer account can log in.
Administrator	administrator	Manage all users (create, view, delete, reset passwords); manage sessions; enable O&M mode.

If the system prompts that the password is incorrect during login, update the software to the latest version.

- The passwords for the user, admin, and administrator accounts are the username followed by the device serial number (SN). For example, if the device SN is "SN12345678" and the username is "user", the default password is "userSN12345678".
- The develop account uses a dynamic password.

Non-Network security mode

User Type	Account	Password	Permissions
General user	user	pw1111	Monitoring access and basic settings (e.g., overview, device monitoring, partial historical data).
O&M user	admin	pw8888	All operations and functions described in this manual are based on the permissions of the O&M user.

- In network security mode, users are forced to change default passwords; in non-network security mode, password changes are optional but strongly recommended to enhance security. You may see a password leak if you do not change the default password, or an increased risk of the account getting hacked or compromised if you use the default password for a long time. Besides, you may not be able to access the device if you have lost your password. All these situations may cause losses for the plant, and such losses shall be borne by users.
- To ensure the security of your account, please change the initial password in time and update it regularly. Please keep your new password safe to avoid unauthorized access due to password leakage.
- Passwords should be 8–32 character long and contain at least three of the following four character types: uppercase letters, lowercase letters, numbers, and special characters.
- The user interface varies depending on the user type. All operations in this manual are described based on the permissions of the O&M user (admin).

- For firmware versions EUCLASE-S_B001.V001.P040 and later, network security mode is enabled by default. Earlier versions default to non-network security mode.
- To enable network security mode while using firmware earlier than EUCLASE-S_B001.V001.P040, you must first upgrade to P040. For details on enabling the network security mode, see 6.4 Network Security Mode Switch.
- Firmware version checking and upgrade operations can be performed via the iSolarCloud App (See 6.6 Firmware Update).
- Before enabling this mode, ensure you understand its effects as it cannot be disabled later.

6.4 Network Security Mode Switch

To enable the network security mode, refer to the following steps:

Step 1 Tap **Settings > Operation parameters > Regular parameters > Network security mode**to enable it.

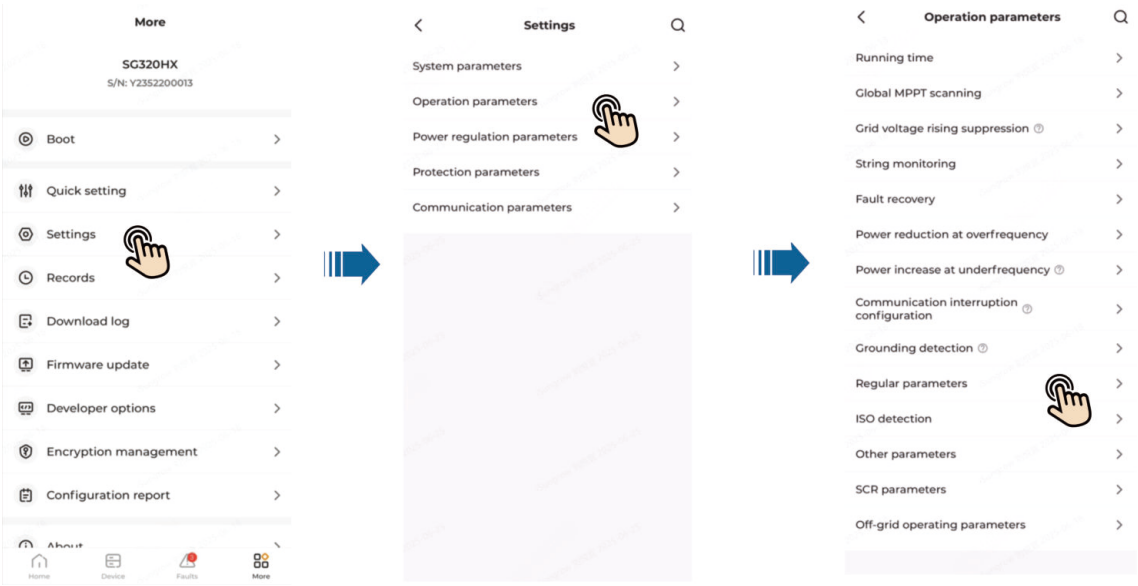

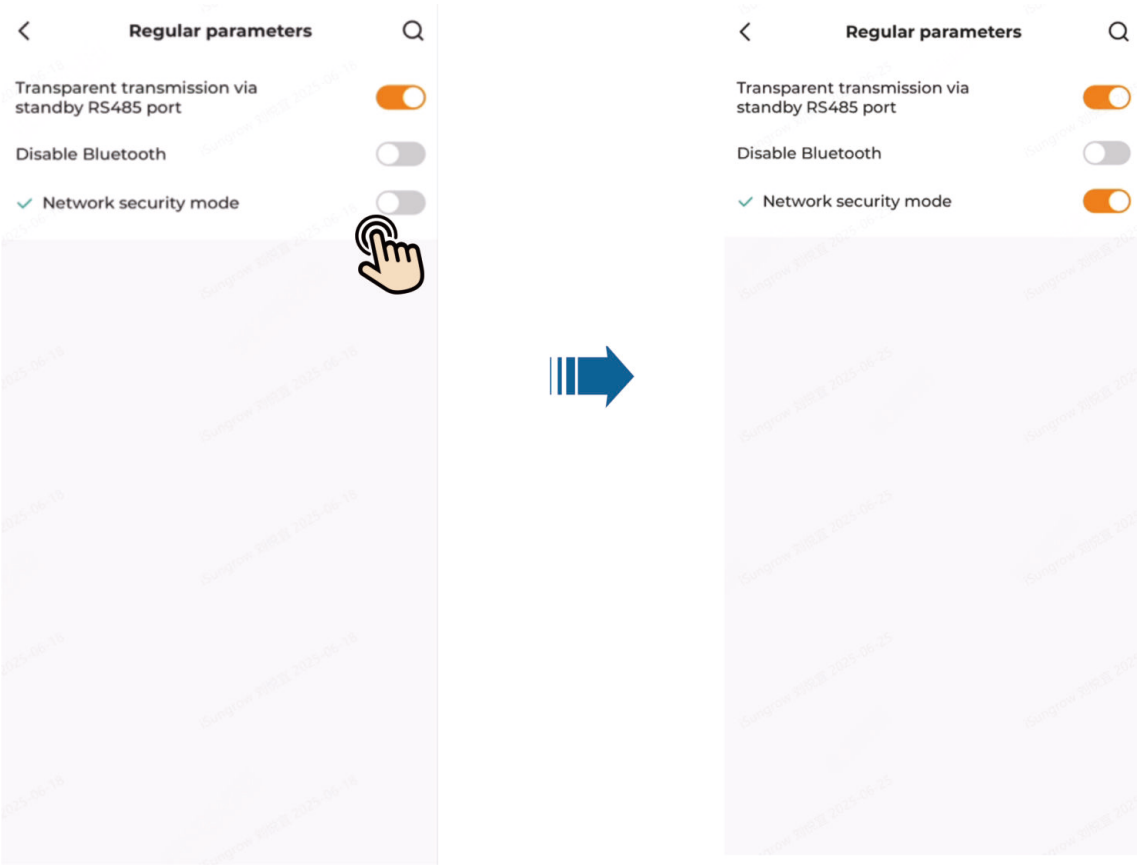

Before enabling this mode, ensure you understand its effects as it cannot be disabled later.

--End

6.5 Inverter Commissioning (via iSolarCloud App)

For device commissioning operations, please refer to the **iSolarCloud App User Manual**. Alternatively, you can scan the QR code below to access the manual.

6.6 Firmware Update

To avoid download failure due to poor on-site network signal, it is recommended to download the firmware package to the mobile device in advance.

Step 1 Enable the "Mobile data" of the mobile device.

Step 2 Open the App, enter the account and password on the login interface. Tap **Login** to enter the home interface.

Step 3 Tap **More > Firmware Download** to enter corresponding interface on which you can view the device list.

Step 4 Select the device model before downloading the firmware. Tap the device name in the device list to enter the firmware upgrade package detail interface, and tap behind the firmware upgrade package to download it.



Step 5 Return to the **Firmware Download** interface, tap in the upper right corner of the interface to view the downloaded firmware upgrade package.

Step 6 Login the App via local access mode.

Step 7 Tap **More** on the App home interface and then tap **Firmware Update**.

Step 8 Tap the upgrade package file, a prompt box will pop up asking whether to upgrade the firmware with the file, tap **CONFIRM** to perform the firmware upgrade.



Step 9 Wait for the file to be uploaded. When the upgrade is finished, a message is displayed indicating that the upgrade is completed. Tap **Complete** to end the upgrade.

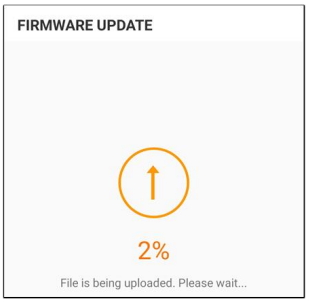

--End

7 Commissioning

7.1 Inspection Before Commissioning

Check the following items before starting the inverter:

- All equipment has been reliably installed.
- DC switch(es) and AC circuit breaker are in the "OFF" position.
- The ground cable is properly and reliably connected.
- The AC cable is properly and reliably connected.
- The DC cable is properly and reliably connected.
- The communication cable is properly and reliably connected.
- The unused terminals are sealed.
- No foreign items, such as tools, are left on the top of the machine or in the junction box (if there is).
- The AC circuit breaker is selected in accordance with the requirements of this manual and local standards.
- All warning signs & labels are intact and legible.

7.2 Commissioning Procedure

Prerequisite

If all of the items mentioned above meet the requirements, proceed as follows to start up the inverter for the first time.

Step 1 Rotate one DC switch of the inverter to the "ON" position. When the indicator blinks blue slowly, turn the other DC switches to the “ON” position.

NOTICE

- **Strictly follow the preceding sequence. Otherwise, the product may be damaged, and the loss caused is not covered by the warranty.**
- **If the DC side is powered up while the AC side is not, the inverter will report a fault named “Grid Power Outage” (the fault information can be viewed on the iSolarCloud App, see “Records” for details). The fault is automatically cleared when the AC circuit breaker between the inverter and the grid is closed.**
- **Before closing the AC circuit breaker between the inverter and the power grid, use a multimeter that is set to the AC gear to ensure that the AC voltage is within the specified range. Otherwise, the inverter may be damaged.**

Step 2 Close the AC circuit breaker between the inverter and the grid.

Step 3 Install the iSolarCloud App, see 6.2 Installing App for details.

Step 4 Set initial protection parameters via the iSolarCloud App when the inverter is connected to the grid for the first time . If the irradiation and grid conditions meet requirements, the inverter normally operates.

Step 5 The home page is automatically displayed when the setting is completed. The indicator is steady blue, and the inverter is in grid-connected operation.

⚠ WARNING

It is strictly forbidden to close the DC switch if the inverter is in grid-connected status. Otherwise, the inverter may be damaged due to the lack of insulation impedance detection, and the loss caused is not covered by the warranty.

--End

8 Troubleshooting and Maintenance

8.1 Troubleshooting

Once the inverter fails, the fault information is displayed on the App interface. If the inverter is equipped with an LCD screen, the fault information can be viewed on it.

The fault codes and troubleshooting methods of all PV inverters are detailed in the table below, and only some of the faults may occur to the model you purchased. When a fault occurs, you can check the fault information according to the fault code on the mobile app.

Fault Code	Fault Name	Corrective Measures
2, 3, 14, 15	Grid Overvoltage	Generally, the inverter will be reconnected to the grid after the grid returns to normal. If the fault occurs repeatedly: 1. Measure the actual grid voltage, and contact the local electric power company for solutions if the grid voltage is higher than the set value. 2. Check whether the protection parameters are appropriately set via the App or the LCD. Modify the overvoltage protection values with the consent of the local electric power operator. 3. Contact Sungrow Customer Service if the preceding causes are ruled out and the fault persists.
4, 5	Grid Undervoltage	Generally, the inverter will be reconnected to the grid after the grid returns to normal. If the fault occurs repeatedly: 1. Measure the actual grid voltage, and contact the local electric power company for solutions if the grid voltage is lower than the set value. 2. Check whether the protection parameters are appropriately set via the App or the LCD. 3. Check whether the AC cable is firmly in place. 4. Contact Sungrow Customer Service if the preceding causes are ruled out and the fault persists.

Fault Code	Fault Name	Corrective Measures
8	Grid Overfrequency	Generally, the inverter will be reconnected to the grid after the grid returns to normal. If the fault occurs repeatedly: 1. Measure the actual grid frequency, and contact the local electric power company for solutions if the grid frequency is beyond the set range. 2. Check whether the protection parameters are appropriately set via the App or the LCD. 3. Contact Sungrow Customer Service if the preceding causes are ruled out and the fault persists.
9	Grid Underfrequency	
10	Grid Power Outage	Generally, the inverter will be reconnected to the grid after the grid returns to normal. If the fault occurs repeatedly: 1. Check whether the grid supplies power reliably. 2. Check whether the AC cable is firmly in place. 3. Check whether the AC cable is connected to the correct terminal (whether the live wire and the N wire are correctly in place). 4. Check whether the AC circuit breaker is connected. 5. Contact Sungrow Customer Service if the preceding causes are ruled out and the fault persists.
12	Excess Leakage Current	1. The fault can be caused by poor sunlight or damp environment, and generally the inverter will be reconnected to the grid after the environment is improved. 2. If the environment is normal, check whether the AC and DC cables are well insulated. 3. Contact Sungrow Customer Service if the preceding causes are ruled out and the fault persists.
13	Grid Abnormal	Generally, the inverter will be reconnected to the grid after the grid returns to normal. If the fault occurs repeatedly:

Fault Code	Fault Name	Corrective Measures
		1. Measure the actual grid, and contact the local electric power company for solutions if the grid parameter exceeds the set range. 2. Contact Sungrow Customer Service if the preceding causes are ruled out and the fault persists.
17	Grid Voltage Imbalance	Generally, the inverter will be reconnected to the grid after the grid returns to normal. If the fault occurs repeatedly: 1. Measure the actual grid voltage. If grid phase voltages differ greatly, contact the electric power company for solutions. 2. If the voltage difference between phases is within the permissible range of the local power company, modify the grid voltage imbalance parameter through the App or the LCD. 3. Contact Sungrow Customer Service if the preceding causes are ruled out and the fault persists.
28, 29, 208, 212, 448-479	PV Reverse Connection Fault	1. Check whether the corresponding string is of reverse polarity. If so, disconnect the DC switch and adjust the polarity when the string current drops below 0.5 A. 2. Contact Sungrow Customer Service if the preceding causes are ruled out and the fault persists. *The code 28 to code 29 are corresponding to PV1 to PV2 respectively. *The code 448 to code 479 are corresponding to string 1 to string 32 respectively.
480	Dispatch interruption alarm	1. Check whether the dispatch commands between the SCADA, data logger, and inverter are issued normally. 2. If the alarm is not caused by the foregoing reason and persists, contact Sungrow Customer Service.
532-547, 564-579	PV Reverse Connection Alarm	1. Check whether the corresponding string is of reverse polarity. If so, disconnect the DC switch and adjust the polarity when the string current drops below 0.5 A.

Fault Code	Fault Name	Corrective Measures
		2. Contact Sungrow Customer Service if the preceding causes are ruled out and the alarm persists. *The code 532 to code 547 are corresponding to string 1 to string 16 respectively. *The code 564 to code 579 are corresponding to string 17 to string 32 respectively.
548-563, 580-595	PV Abnormal Alarm	Check whether the voltage and current of the inverter is abnormal to determine the cause of the alarm. 1. Check whether the corresponding module is sheltered. If so, remove the shelter and ensure module cleanness. 2. Check whether the battery board wiring is loose, if so, make it reliably connected. 3. Check if the DC fuse(if there is fuse between PV string and inverter DC input) is damaged. If so, replace the fuse. 4. Contact Sungrow Customer Service if the preceding causes are ruled out and the alarm persists. *The code 548 to code 563 are corresponding to string 1 to string 16 respectively. *The code 580 to code 595 are corresponding to string 17 to string 32 respectively.
37	Excessively High Ambient Temperature	Generally, the inverter will resume operation when the internal or module temperature returns to normal. If the fault persists: 1. Check whether the ambient temperature of the inverter is too high; 2. Check whether the inverter is in a well-ventilated place; 3. Check whether the inverter is exposed to direct sunlight. Shield it if so; 4. Check whether the fan is running properly. Replace the fan if not; 5. Contact Sungrow Power Customer Service if the fault is due to other causes and the fault persists.

Fault Code	Fault Name	Corrective Measures
43	Excessively Low Ambient Temperature	Stop and disconnect the inverter. Restart the inverter when the ambient temperature rises within the operation temperature range.
39	Low System Insulation Resistance	Wait for the inverter to return to normal. If the fault occurs repeatedly: 1. Check whether the ISO resistance protection value is excessively high via the app or the LCD, and ensure that it complies with the local regulations. 2. Check the resistance to ground of the string and DC cable. Take corrective measures in case of short circuit or damaged insulation layer. 3. If the cable is normal and the fault occurs on rainy days, check it again when the weather turns fine. 4. If there are batteries, check whether battery cables are damaged and whether terminals are loose or in poor contact. If so, replace the damaged cable and secure terminals to ensure a reliable connection. 5. Contact Sungrow Customer Service if the preceding causes are ruled out and the fault persists.
106	Grounding Cable Fault	1. Check whether the AC cable is correctly connected. 2. Check whether the insulation between the ground cable and the live wire is normal. 3. Contact Sungrow Customer Service if the preceding causes are ruled out and the fault persists.
84	Reverse Connection Alarm of the Meter/CT	1. Check if the meter is wrongly connected. 2. Check if the input and output wiring of the meter is reversed. 3. If the existing system is enabled, please check if the rated power setting of the existing inverter is correct.
514	Meter Communication Abnormal Alarm	1. Check whether the communication cable and the terminals are abnormal. If so, correct them to ensure reliable connection.

Fault Code	Fault Name	Corrective Measures
		2. Reconnect the communication cable of the meter. 3. Contact Sungrow Customer Service if the preceding causes are ruled out and the alarm persists.
323	Grid Confrontation	1. Check whether the output port is connected to actual grid. Disconnect it from the grid if so. 2. Contact Sungrow Customer Service if the preceding causes are ruled out and the fault persists.
75	Inverter Parallel Communication Alarm	1. Check whether the communication cable and the terminals are abnormal. If so, correct them to ensure reliable connection. 2. Reconnect the communication cable of the meter. 3. Contact Sungrow Customer Service if the preceding causes are ruled out and the alarm persists.
7, 11, 16, 19–25, 30–34, 36, 38, 40–42, 44–50, 52–58, 60–69, 85, 87, 92, 93, 100–105, 107–114, 116–124, 200–211, 248–255, 300–322, 324–328, 401–412, 600–603, 605, 608, 612, 616, 620, 622–624, 800, 802, 804, 807, 1096–1122, 681	System Fault	1. Wait for the inverter to return to normal. 2. Disconnect the AC and DC switches, and disconnect the battery side switches if there are batteries. Close the AC and DC switches in turn 15 minutes later and restart the system. 3. Contact Sungrow Customer Service if the preceding causes are ruled out and the fault persists.

Fault Code	Fault Name	Corrective Measures
59, 70–74, 76–83, 89, 216–218, 220–233, 432–434, 500–513, 515–518, 635–640, 648, 900, 901, 910, 911, 996	System Alarm	1. The inverter can continue running. 2. Check whether the related wiring and terminal are abnormal, check whether there are any foreign materials or other environmental abnormalities, and take corresponding corrective measures when necessary. 3. If the fault persists, please contact Sungrow Power Customer Service.
264-283	MPPT Reverse Connection	1. Check whether the corresponding string is of reverse polarity. If so, disconnect the DC switch and adjust the polarity when the string current drops below 0.5 A. 2. Contact Sungrow Customer Service if the preceding causes are ruled out and the fault persists. *The code 264 to code 279 are corresponding to string 1 to string 20 respectively.
332-363	Boost Capacitor Overvoltage Alarm	1. The inverter can continue running. 2. Check whether the related wiring and terminals are abnormal, check whether there are any foreign materials or other environmental abnormalities, and take corresponding corrective measures when necessary. If the fault persists, please contact Sungrow Power Customer Service.
364-395	Boost Capacitor Overvoltage Fault	1. Disconnect the AC and DC switches, and disconnect the battery side switches if there are batteries. Close the AC and DC switches in turn 15 minutes later and restart the system. 2. If the fault persists, please contact Sungrow Power Customer Service.
1470	MPPT connection unbalance alarm	1. Disconnect the AC switch and DC switch, and ensure that each MPPT corresponding to each heatsink has PV strings connected. 2. After the device resumes grid-connected operation for a period of time, if the alarm

Fault Code	Fault Name	Corrective Measures
		occurs again, contact Sungrow Customer Service.
1548-1579	String Current Reflux	1. Check whether the number of PV modules of the corresponding string is less than other strings. If so, disconnect the DC switch and adjust the PV module configuration when the string current drops below 0.5 A. 2. Check whether the PV module is shaded; 3. Disconnect the DC switch to check whether the open circuit voltage is normal when the string current drops below 0.5 A. If so, check the wiring and configuration of the PV module, 4. Check whether the orientation of the PV module is abnormal.
1600 - 1615, 1632 - 1655	PV Grounding Fault	1. When the fault occurs, it is forbidden to directly disconnect the DC switch and unplug PV terminals when the direct current is greater than 0.5 A; 2. Wait until the direct current of the inverter falls below 0.5 A, then disconnect the DC switch and unplug the faulty strings; 3. Do not reinsert the faulty strings before the grounding fault is cleared; 4. If the fault is not caused by the foregoing reasons and still exists, contact Sungrow Customer Service.
1616	System Hardware Fault	1. It is prohibited to disconnect the DC switch when the DC current is greater than 0.5 A when the fault occurs. 2. Disconnect the DC switch only when the inverter DC side current drops below 0.5 A. 3. It is prohibited to power up the inverter again. Please contact Sungrow Customer Service.
127	String Overvoltage Level 1	Generally, the inverter resumes operation after the string voltage returns to the inverter startup voltage range. If the fault occurs repeatedly: 1. See the PV input configuration description in the user manual and check whether the maximum open-circuit voltage of the

Fault Code	Fault Name	Corrective Measures
		string configuration meets the corresponding requirements in the user manual. If not, wait until the PV string current drops below 0.5 A, then disconnect the DC switch and adjust the string configuration. 2. If the fault is not caused by the foregoing reason and persists, contact Sungrow Customer Service.
128	String Overvoltage Level 2	Generally, the inverter resumes operation after the string voltage returns to the normal operating voltage range of the inverter. If the fault occurs repeatedly: 1. See the PV input configuration description in the user manual and check whether the maximum open-circuit voltage of the string configuration meets the corresponding requirements in the user manual. If not, wait until the PV string current drops below 0.5 A, then disconnect the DC switch and adjust the string configuration. If the inverter remains in this state for a long time, the inverter may fail. 2. If the fault is not caused by the foregoing reason and persists, contact Sungrow Customer Service.

Contact SUNGROW if the measures listed in the "**Troubleshooting Method**" column have been taken but the problem persists.

8.2 Maintenance

8.2.1 Maintenance Notices

⚠ DANGER

Risk of inverter damage or personal injury due to incorrect service!

- **Be sure to use special insulation tools when perform high-voltage operations.**
- **Before maintenance, disconnect the AC circuit breaker on the grid side and then the DC switch. If a fault that may cause personal injury or device damage is found before maintenance, disconnect the AC circuit breaker and wait until the night before operating the DC switch. Otherwise, a fire inside the product or an explosion may occur, causing personal injuries.**
- **After the inverter is powered off for 25 minutes, measure the voltage and current with professional instrument. Only when there is no voltage nor current can operators who wear protective equipment operate and maintain the inverter**
- **Even if the inverter is shut down, it may still be hot and cause burns. Wear protective gloves before operating the inverter after it cools down.**

⚠ DANGER

When maintaining the product, it is strictly prohibited to open the product if there is an odor or smoke or if the product appearance is abnormal. If there is no odor, smoke, or obvious abnormal appearance, repair or restart the inverter according to the alarm corrective measures. Avoid standing directly in front of the inverter during maintenance.

⚠ CAUTION

To prevent misuse or accidents caused by unrelated personnel: Post prominent warning signs or demarcate safety warning areas around the inverter to prevent accidents caused by misuse.

NOTICE

- **Restart the inverter only after removing the fault that impairs safety performance.**
- **As the inverter contains no component parts that can be maintained, never open the enclosure, or replace any internal components.**
- **To avoid the risk of electric shock, do not perform any other maintenance operations beyond this manual. If necessary, contact SUNGROW for maintenance. Otherwise, the losses caused is not covered by the warranty.**

NOTICE

Touching the PCB or other static sensitive components may cause damage to the device.

- **Do not touch the circuit board unnecessarily.**
- **Observe the regulations to protect against electrostatic and wear an anti-static wrist strap.**

8.2.2 Disconnecting the Inverter

Prerequisite

⚠ CAUTION

Danger of burns!
Even if the inverter is shut down, it may still be hot and cause burns. Wear protective gloves before operating the inverter after it cools down.

For maintenance or other service work, the inverter must be switched off. Proceed as follows to disconnect the inverter. Lethal voltages or damage to the inverter will follow if otherwise.

Step 1 Stop the inverter via the iSolarCloud App.

Step 2 Disconnect the external AC circuit breaker and prevent it from inadvertent reconnection.

Step 3 Rotate the DC switch to the "OFF" position for disconnecting all of the PV string inputs.

Step 4

Step 5 Wait about 25 minutes until the capacitors inside the inverter completely discharge.

Step 6 Ensure that the DC cable is current-free with a current clamp.

--End

8.2.3 Routine Maintenance

Item	Method	Period
Device clean	Check whether the air outlet and heat sink are blocked by dust and other objects. Check if the air inlet and outlet are normal. Clean the air inlet and outlet, if necessary.	Six months to a year (depend on the dust contents in air)
Fans	Check whether there is a fan alarm on the App. Check whether there is any abnormal noise when the fan is rotating.	Once a year

Item	Method	Period
	Clean or replace the fans if necessary (see the following section).	
Cable entry	Check whether the cable entry is insufficiently sealed or the gap is excessively large, and reseal the entry when necessary.	Once a year
Electrical connection	Check whether cables are loose or fall off. Check whether the cable is damaged, especially the part in contact with the metal enclosure.	Six months to a year
Surrounding vegetation	Perform inspection and weeding before vegetation wilts. Clean the site promptly after weeding and do not pile the weed up around the device.	Based on the local wilting season

8.2.4 Cleaning Air Inlet and Outlet

A significant amount of heat is generated when the inverter is working.

In order to maintain good ventilation, please check to make sure the air inlet and outlet are not blocked.

Clean the air inlet and outlet with soft brush or vacuum cleaner if necessary.

8.2.5 Fan Maintenance

⚠ DANGER

- **Power off the inverter and disconnect it from all power supplies before maintaining fans.**
- **After the inverter is powered off for 25 minutes, measure the voltage and current with professional instrument. Only when there is no voltage nor current can operators who wear protective equipment operate and maintain the inverter.**
- **Fan maintenance must be performed by professionals.**

Fans inside the inverter are used to cool the inverter during operation. If the fans do not operate normally, the inverter may not be cooled down and inverter efficiency may decrease. Therefore, it is necessary to clean dirty fans and replace the broken fans in a timely manner.

The operation procedure is as follows:

Step 1 Stop the inverter (see 8.2.2 Disconnecting the Inverter).

Step 2 Loosen the screw on the sealing plate of the fan module.

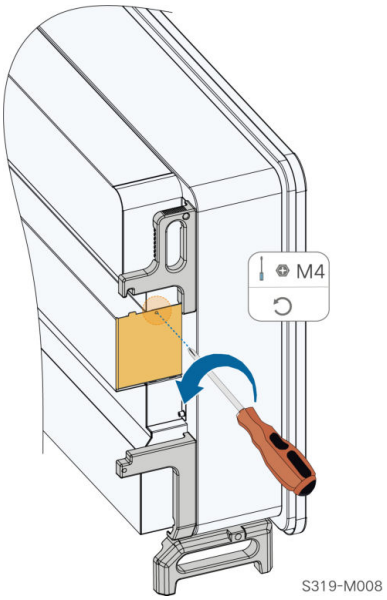

Step 3 Press the tab of the latch hook, unplug the cable connection joint outwards, and loosen the screw on the fan holder.

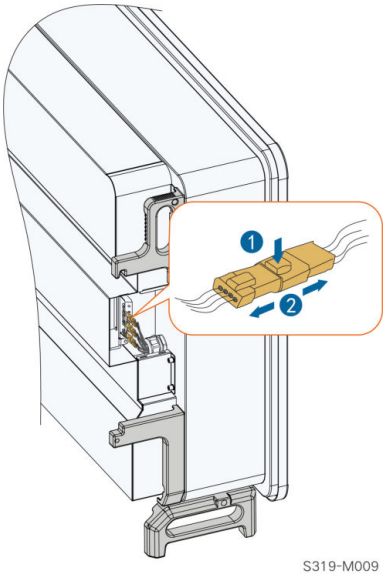

Step 4 Loosen screws on the sides of fans.

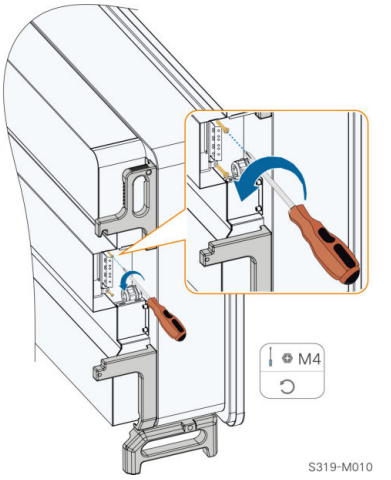

Step 5 Pull out the fans. Clean them with a soft brush or vacuum cleaner, and replace them when necessary.

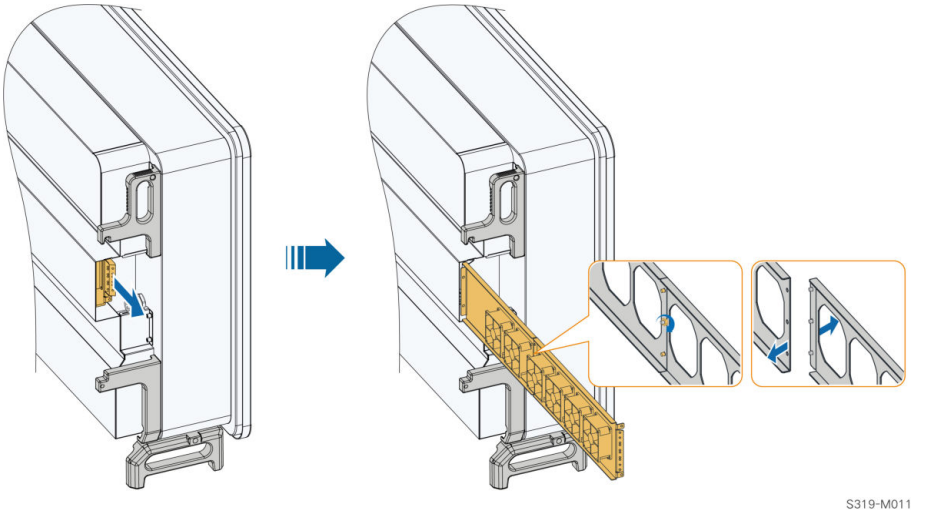

If there is not enough space, pull out part of the fans and remove the screws between the two fans.

--End

8.3 Inverter Disposal

8.3.1 Dismantling the Inverter

⚠ CAUTION

Risk of burn injuries and electric shock!
After the inverter is powered off for 25 minutes, measure the voltage and current with professional instrument. Only when there is no voltage nor current can operators who wear protective equipment operate and maintain the inverter.

- Before dismantling the inverter, disconnect the inverter from both AC and DC power sources.
- If there are more than two layers of inverter DC terminals, dismantle the outer DC connectors before dismantling the inner ones.
- If the original packing materials are available, put the inverter inside them and then seal them using adhesive tape. If the original packing materials are not available, put the inverter inside a cardboard box suitable for the weight and size of this inverter and seal it properly.

Step 1 Refer to 5 Electrical Connection to disconnect all cables in reverse steps. In particular, when removing the DC connector, use a connector wrench to loosen the locking parts and install waterproof plugs.

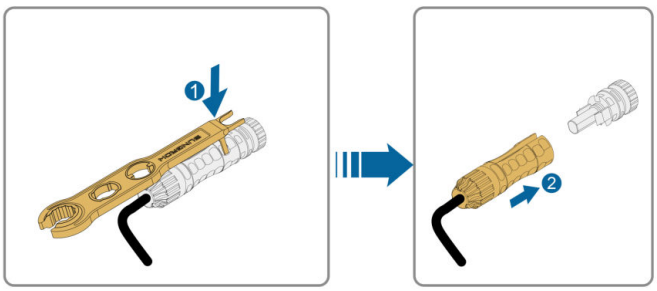

Step 2 Refer to 4 Mechanical Mounting, to dismantle the inverter in reverse steps.

Step 3 If necessary, remove the wall-mounting bracket from the wall.

Step 4 If the inverter will be used again in the future, please refer to 3.3 Inverter Storage for a proper conservation.

--End

8.3.2 Disposal of Inverter

Users take the responsibility for the disposal of the inverter.

⚠ WARNING

Please scrap the inverter in accordance with relevant local regulations and standards to avoid property losses or casualties.

NOTICE

Some parts of the inverter may cause environmental pollution. Please dispose of them in accordance with the disposal regulations for electronic waste applicable at the installation site.

9 Appendix

9.1 Technical Data

Parameters	SG285HX	SG320HX
Input (DC)		
Max. PV input voltage	1500 V	1500 V
Min. PV input voltage / Startup input voltage	500 V / 550 V	500 V / 550 V
Nominal PV input voltage	1080 V	1080 V
MPP voltage range	500 V – 1500 V	500 V – 1500 V
No. of independent MPP inputs	12	12 (optional: 16)
Max. number of PV strings per MPPT	2	2
Max. PV input current per MPPT	-	40 A (optional: 30 A for 16 MPPT inputs)
Max. PV input current	12 * 40 A	-
Max. DC short-circuit current per MPPT	60 A	60 A
Output (AC)		
AC output power	285 kVA @ 40 ℃	352 kVA @ 30 ℃ / 320 kVA @ 40 ℃ / 295 kVA @ 50 ℃
Max. AC output current	206 A	254 A
Nominal AC voltage	3 / PE, 800 V	
AC voltage range	640 – 920V	
Nominal grid frequency / Grid frequency range	50 Hz / 45 – 55 Hz, 60 Hz / 57 – 63 Hz	
THD	< 3 % (at nominal power)	
DC current injection	< 0.5 % In	

Parameters	SG285HX	SG320HX
Power factor at nominal power / Adjustable power factor	□ 0.99 / 0.8 leading – 0.8 lagging	
Feed-in phases / Connection phases	3 / 3	
Efficiency		
Max. efficiency / European efficiency	99.02 % / 98.8 %	
Protection		
DC reverse connection protection	Yes	
AC short circuit protection	Yes	
Leakage current protection	Yes	
Grid monitoring	Yes	
Ground fault monitoring	Yes	
DC switch / AC switch	Yes / No	
PV string current monitoring	Yes	
Q at night function	Yes	
Anti-PID and PID recovery function	Optional	
Surge protection	DC Type II / AC Type II	
General Data		
Dimensions (W*H*D)	1136*870*361 mm	
Weight*	≤116 kg	
Isolation method	Transformerless	
Degree of protection	IP66	
Power consumption at night	< 6 W	

Parameters	SG285HX	SG320HX
Operating ambient temperature range	-30 to 60 ℃	
Allowable relative humidity range	0 – 100 %	
Cooling method	Smart forced air cooling	
Max. operating altitude	4000 m (> 3000 m derating)	
Display	LED, Bluetooth+App	
Communication	RS485 / PLC	
DC connection type	MC4-Evo2 (Max. 6 mm², optional 10mm²)	
AC connection type	Support OT/DT terminal (Max. 400 mm²)	
Grid Support	Q at night function, LVRT, HVRT,active & reactive power control and power ramp rate control	

*Due to the multi-supplier for some key components, the actual weight may have a ±8% deviation, please refer to the actually delivered product.

Parameters	SG333HX	SG350HX
Input (DC)		
Max. PV input voltage	1500 V	
Min. PV input voltage / Startup input voltage	500 V / 550 V	
Nominal PV input voltage	1080 V	
MPP voltage range	500 V – 1500 V	
No. of independent MPP inputs	12 (optional: 16)	12 (Optional: 16)
Max. number of PV strings per MPPT	2	2
Max. PV input current	12 * 40 A (Optional: 16 * 30 A)	12 * 40 A (Optional: 16 * 30 A)
Max. DC short-circuit current per MPPT	60 A	

Parameters	SG333HX	SG350HX
Output (AC)		
AC output power	333 kVA @ 35 ℃ / 320 kVA @40 ℃	352 kVA @ 30 ℃ / 320 kVA @ 40 ℃ / 295 kVA @ 50 ℃
Max. AC output current	240.5 A	254 A
Nominal AC voltage	3 / PE, 800 V	
AC voltage range	640 – 920V	
Nominal grid frequency / Grid frequency range	50 Hz / 45 – 55 Hz, 60 Hz / 55 – 65 Hz	
THD	< 3 % (at nominal power)	
DC current injection	< 0.5 % In	
Power factor at nominal power / Adjustable power factor	□ 0.99 / 0.8 leading – 0.8 lagging	
Feed-in phases / Connection phases	3 / 3	
Efficiency		
Max. efficiency / European efficiency	99.02 % / 98.8 % / –	99.02 % / 98.8 %
Protection		
DC reverse connection protection	Yes	
AC short circuit protection	Yes	
Leakage current protection	Yes	
Grid monitoring	Yes	
Ground fault monitoring	Yes	
DC switch / AC switch	Yes / No	
PV string current monitoring	Yes	

Parameters	SG333HX	SG350HX
Q at night function	Yes	
Anti-PID and PID recovery function	Optional	
Surge protection	DC Type II / AC Type II	
General Data		
Dimensions (W*H*D)	1136 * 870 * 361 mm	1136*870*361 mm
Weight*	≤ 116 kg	
Isolation method	Transformerless	
Degree of protection	IP66	IP66
Power consumption at night	< 6 W	
Operating ambient temperature range	-30 to 60℃	-30 to 60℃
Allowable relative humidity range	0 – 100 %	
Cooling method	Smart forced air cooling	
Max. operating altitude	4000 m (> 3000 m derating)	4000 m (> 3000 m derating)
Display	LED, Bluetooth+App	
Communication	RS485 / PLC	
DC connection type	MC4-Evo2 (Max. 6 mm², optional 10mm²)	MC4-Evo2 (Max. 6 mm², optional 10mm²)
AC connection type	Support OT/DT terminal (Max. 400 mm²)	Support OT/DT terminal (Max. 400 mm²)
Compliance	IEC 62109, IEC 61727, IEC 62116, IEC 60068, IEC 61683, EN 50549-1 /2	IEC 62109, IEC 61727, IEC 62116, IEC 60068, IEC 61683, VDE-AR-N 4110:2018,VDE-AR-N 4120:2018, EN 50549-1/2, UNE 206007-1:2013, P.O.12.3, UTE C15-712-1:2013

Parameters	SG333HX	SG350HX
Grid Support	Q at night function, LVRT, HVRT,active & reactive power control and power ramp rate control, Q-U control, P-f control	

*Due to the multi-supplier for some key components, the actual weight may have a ±10% deviation, please refer to the actually delivered product.

9.2 Wring Distance of DI Dry Contact

The wiring distance between DI dry contact terminals must meet the requirements in the table below. The wiring distance L is the total length of all DI signal cables.

$$L = 2\sum_{k=1}^{n} L_k$$

L_K refers to the cable length in one direction between the DI dry contact terminal of the kth inverter and the corresponding terminal of the $(k-1)^{th}$ inverter.

Table 9-1 Correspondence Between Inverter Quantity and Maximum Wiring Distance

Number of Inverter	Maximum Wiring Distance(unit:m)	
	16AWG / 1.31mm^2	17AWG / 1.026mm^2
1	13030	10552
2	6515	5276
3	4343	3517
4	3258	2638
5	2606	2110
6	2172	1759
7	1861	1507
8	1629	1319
9	1448	1172
10	1303	1055
11	1185	959
12	1086	879
13	1002	812

Number of Inverter	Maximum Wiring Distance(unit:m)	
	16AWG / 1.31mm^2	17AWG / 1.026mm^2
14	931	754
15	869	703
16	814	660
17	766	621
18	724	586
19	686	555
20	652	528
21	620	502
22	592	480
23	567	459
24	543	440
25	521	422

NOTICE

In case the specification of the cable used is not included in the table above, when there is only one inverter, ensure that the line impedance of the input node is less than 300Ω; and when there are multiple inverters connected in the daisy chain, ensure that the impedance is less than 300Ω/number of inverter.

9.3 Quality Assurance

When product faults occur during the warranty period, SUNGROW will provide free service or replace the product with a new one.

The software security update period for this product aligns with the warranty period. During the warranty, security patches or updates will be provided if any vulnerabilities or compatibility issues are identified.

Evidence

During the warranty period, the customer shall provide the product purchase invoice and date. In addition, the trademark on the product shall be undamaged and legible. Otherwise, SUNGROW has the right to refuse to honor the quality guarantee.

Conditions

- After replacement, unqualified products shall be processed by SUNGROW.
- The customer shall give SUNGROW a reasonable period to repair the faulty device.

Exclusion of Liability

In the following circumstances, SUNGROW has the right to refuse to honor the quality guarantee:

- The free warranty period for the whole machine/components has expired.
- The device is damaged during transport.
- The device is incorrectly installed, refitted, or used.
- The device operates in harsh conditions beyond those described in this manual.
- The fault or damage is caused by installation, repairs, modification, or disassembly performed by a service provider or personnel not from SUNGROW.
- The fault or damage is caused by the use of non-standard or non-SUNGROW components or software.
- The installation and use range are beyond stipulations of relevant international standards.
- The damage is caused by unexpected natural factors.

For faulty products in any of above cases, if the customer requests maintenance, paid maintenance service may be provided based on the judgment of SUNGROW.

Product data such as product dimensions are subject to change without prior notice. The latest documentation from SUNGROW should take precedence in case of any deviation.

9.4 Contact Information

In case of questions about this product, please contact us. We need the following information to provide you the best assistance:

- Model of the device
- Serial number of the device
- Fault code/name
- Brief description of the problem

For detailed contact information, please visit: **https://en.SUNGROWpower.com/contactUS**

SUNGROW

Sungrow Power Supply Co., Ltd.

www.sungrowpower.com